Specifications

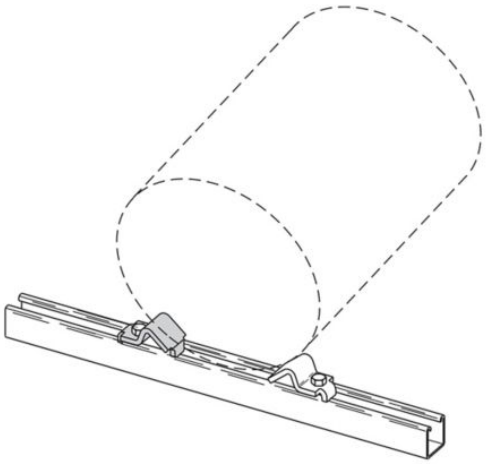

Photo is representative

Eaton B356ZN

Eaton B-Line series pipe roller, 1" H x 3.06" L x 1.62" W, Steel, Electro-plated, 1/4" Gauge

General specifications	
PRODUCT NAME	Eaton B-Line series pipe roller
CATALOG NUMBER	B356ZN
UPC	781011534134
PRODUCT LENGTH/DEPTH	3.06 in
PRODUCT HEIGHT	1 in
PRODUCT WIDTH	1.62 in
PRODUCT WEIGHT	0.42 lb
CERTIFICATIONS	Not Applicable

Powering Business Worldwide

Model

SPECIAL FEATURES	Hole size for 3/8"-16 HHCS
TYPE	Pipe block

Material/finish

FINISH	Electro-plated
MATERIAL	Steel
MATERIAL GAUGE	1/4"

Resources

CATALOGS	Channel Nuts and Hardware Catalog Section Strut Fittings Catalog Section
SPECIFICATIONS AND DATASHEETS	Eaton Specification Sheet - B356ZN

PROJECT NAME:	
PROJECT NUMBER:	
PREPARED BY:	
DATE:	

Eaton Corporation plc
Eaton House
30 Pembroke Road
Dublin 4, Ireland
Eaton.com

Follow us on social media to get the latest product and support information.

© 2025 Eaton. All Rights Reserved.