DRAWING NO. SE208119

REV	DATE	DESCRIPTION	ECO	BY	C'H'K.
V	2018-08-10 11:05:00 EDT	UPDATE AS PER MARKUP	49615	RB	VS

CONNECTOR SIZE	TOLERANCES						
	B	C	E	K DIA.	L	N	O.D.
-10C	±.03	±.04	±.02	±.02	±.06	±.03	±.01
8C - 25	±.06	±.04	±.02	±.02	±.09	±.03	±.01
26 - 34	±.08	±.04	±.02	±.02	±.12	±.03	±.01
35 AND UP	±.09	±.06	±.02	±.02	±.15	±.06	±.01

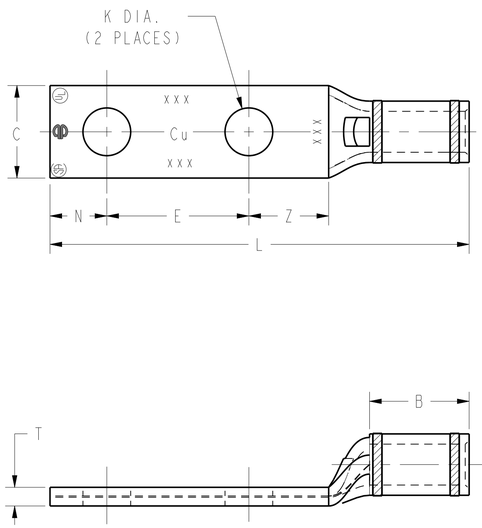

FIG. 1

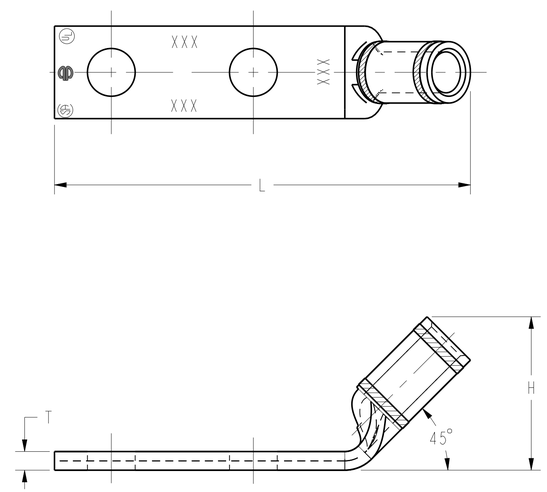

FIG. 2

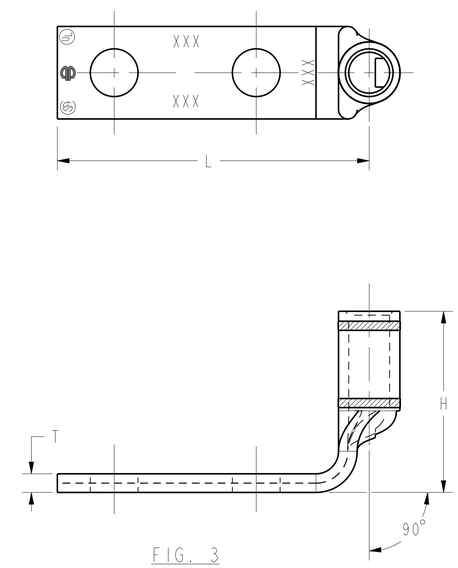

FIG. 3

NOTES:

1. MATERIAL : COPPER TUBING.
2. FINISH: TIN PLATED. THE FOLLOWING SUFFIXES DENOTE OPTIONAL PLATING TYPES. BR=BARE; LD=LEAD; NK=NICKEL; SV=SILVER. (EXAMPLE: YAV4CL2TC14FXNK).
3. CATALOG # PT6515 ADAPTOR IS REQUIRED TO USE "U" DIES IN Y45 SERIES TOOLS.
4. CATALOG # PUADP-1 ADAPTOR IS REQUIRED TO USE "U" DIES IN Y46 SERIES TOOLS.
5. NAVY CABLE SIZE MAY BE OMITTED ON SOME SIZES BECAUSE OF SPACE LIMITATIONS.
6. PERMANENT DIE IN TOOLING.
7. DIMENSIONS IN [ ] BRACKETS ARE IN MILLIMETERS, ROUNDED OFF TO THE NEAREST MILLIMETER UNLESS OTHERWISE NOTED. METRIC DIMENSIONS ARE FOR REFERENCE ONLY.
8. IF HIGHEST REVISION OF THIS SALES PRINT IS AFFECTED. UPDATE PRINT WSA208758 TO INCLUDE THE NEW REVISION.
9. ALL OF THE CATALOG NUMBERS FOR THESE HYLUGS CAN BE ORDERED WITH OR WITHOUT SKIVE.
   EXAMPLE: YAV28L-TC14-FX (SKIVE)
   YAG28L-TC14-FX (NO SKIVE)
10. THE YA30L-FX SIZES SHOWN ON SE208119 SHEET 11 ARE NOT UL/CSA LISTED USING ANY CLASS OF 4/0 FLEX COPPER CONDUCTOR.
11. THESE CATALOG NUMBERS CANNOT BE INSTALLED WITH U8CRT DIE.
12. THESE CATALOG NUMBERS CANNOT BE INSTALLED WITH Y45 OR Y46 TOOLING.

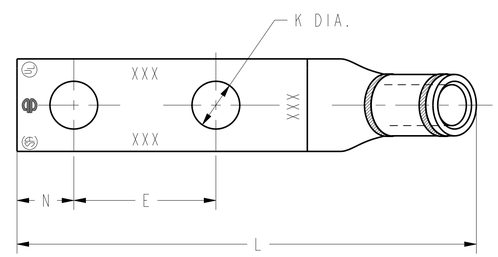

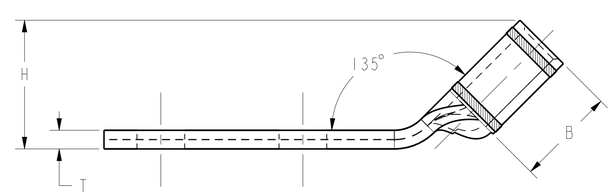

FIG. 4

TO ORDER BURNDY® PRODUCTS CALL

UNITED STATES
1-800-346-4175 (LONDONDERRY, NH)

CANADA:
1-800-361-6975 (QUEBEC)
1-800-387-6487 (ALL OTHER PROVINCES)

FOR PRODUCT INFO: http://www.burndy.com

HYLUG™

ITEM NO:	N/A	
CAT. NO:	YAV-L-2TC-FX, YA-L-2TC-FX	
DRAWN BY:	D.FILLION	12/04/92
CHECKER:	K.HENRY	12/10/92
DSN APPVL:	C.PALAGI	12/14/92
MFG APPVL:	N/A	--
QA APPVL:	A.LOYD	12/14/92
MKT APPVL:	T.NELSON	12/14/92
PROD FAM:	--	
PROJECT #:	--	
DOCUMENT TYPE:	Sales	
REL LEVEL:	In Work	

BURNDY

SCALE: NTS

SIZE: D

DRAWING NO: SE208119

REV: V

SHEET 1 OF 19

REV: PE0200

REV	DATE	DESCRIPTION	ECO	BY	C'H'K.
V	2018-08-10 11:05:00 EDT	UPDATE AS PER MARKUP	49615	RB	VS

CATALOG NO.	FIG. NO.	CONDUCTOR FLEX	CONDUCTOR CODE (AWG)	CONDUCTOR NAVY (5)	BOLT SIZE	DIMENSIONS B	C	E	H	K	L	N	O.D.	T REF.	Z MIN.	BURNDY INSTALLATION TOOLING (# CRIMPS) DIE INDEX	COLOR CODE	MECHANICAL RATCHET MD7-34R	OUR840	Y8MRB-1 Y2MR (6)	HYDRAULIC Y750 Y35 Y39	Y46 (4)	Y45 (3)	DIELESS (# CRIMPS)	WIRE STRIP LENGTH
YA8CL2TC10	1	8 SOL 6 SOL #8 CLASS G,H,I,K,M DLO 37/24	#8 AWG	23	#10	.44 [11]	.41 [10]	.63 [16]	-	.21 [5]	1.84 [47]	.25 [6]	.27 [7]	.08 [2]	.28 [7]	49	RED	W8CRT (1) W8CVT (1)	X8CRT (1) W8CVT (1)	(1 CRIMP)	U8CRT (1)	U8CRT (1)	U8CRT (1)	MECHANICAL: MY29-11 (1)	1/2"
YA8CL2TC1045	2								.68 [17]		1.83 [46]														
YA8CL2TC1090 (11)	3								.80 [20]		1.37 [35]														
YA8CL2TC14	1				1/4		.44 [11]	.63 [16]	-	.27 [7]	1.95 [50]	.31 [8]		.08 [2]	.34 [9]										
YA8CL2TC1445	2								.67 [17]		1.94 [49]														
YA8CL2TC1490 (11)	3								.79 [20]		1.49 [38]														
YA8CL2TC14E1	1				1/4		.44 [11]	1.00 [25]	-	.27 [7]	2.33 [59]	.31 [8]		.08 [2]	.34 [9]										
YA8CL2TC14E145	2								.67 [17]		2.32 [59]														
YA8CL2TC14E190 (11)	3								.79 [20]		1.87 [47]														
YA8CL2TC14E2	1				1/4		.44 [11]	.75 [19]	-	.27 [7]	2.08 [53]	.31 [8]		.08 [2]	.34 [9]										
YA8CL2TC14E245	2								.67 [17]		2.07 [52]														
YA8CL2TC14E290 (11)	3								.79 [20]		1.62 [41]														
YA8CL2TC38	1	8 SOL 6 SOL #8 CLASS G,H,I,K,M DLO 37/24	#8 AWG	23	3/8	.44 [11]	.58 [15]	1.00 [25]	-	.40 [10]	2.52 [64]	.41 [10]	.27 [7]	.06 [2]	.43 [11]	49	RED	W8CRT (1) W8CVT (1)	X8CRT (1) W8CVT (1)	(1 CRIMP)	U8CRT (1)	U8CRT (1)	U8CRT (1)		1/2"
YA8CL2TC3845	2								.66 [17]		2.46 [62]														
YA8CL2TC3890 (11)	3								.75 [19]		2.05 [52]														

SEE SHEET 1 OF 19 FOR NOTES

TO ORDER BURNDY® PRODUCTS CALL

UNITED STATES
1-800-346-4175 (LONDONDERRY, NH)

CANADA:
1-800-361-6975 (QUEBEC)
1-800-387-6487 (ALL OTHER PROVINCES)

FOR PRODUCT INFO: http://www.burndy.com

HYLUG™

ITEM NO:	N/A	
CAT. NO:	YA8CL-2TC- (TABLE)	
DRAWN BY:	D.FILLION	12/04/92
CHECKER:	K.HENRY	12/10/92
DSN APPVL:	C.PALAGI	12/14/92
MFG APPVL:	N/A	--
QA APPVL:	A.LLOYD	12/14/92
MKT APPVL:	T.NELSON	12/14/92
PROD FAM:	--	
PROJECT #:	--	
DOCUMENT TYPE:	Sales	
REL LEVEL:	In Work	

BURNDY

SCALE: NTS

DRAWING NO	REV
SE208119	V

SIZE: D

SHEET 2 OF 19

REV: PE0200

DRAWING NO. SE208119

REV	DATE	DESCRIPTION	ECO	BY	C'H'K.
V	2018-08-10 11:05:00 EDT	UPDATE AS PER MARKUP	49615	RB	VS

CATALOG NO.	CONDUCTOR FLEX	CONDUCTOR CODE (AWG)	CONDUCTOR NAVY (5)	BOLT SIZE	FIG NO.	DIMENSIONS B	C	E	H	K	L	N	O.D.	T REF.	Z MIN.	INSTALLATION TOOLING (# CRIMPS) DIE INDEX	COLOR CODE	MECHANICAL MD7-34R	OUR840	Y2MR (1) (6)	HYDRAULIC Y750 Y35 Y39 PAT750	Y46 PAT46 (4)	Y45 (3)	DIELESS (# CRIMPS)	WIRE STRIP LENGTH
YAV6CL2TC10FX	#6 CLASS G,H,I,K,M DLO 61/24	#6 AWG	30	#10	1	.50 [13]	.45 [11]	.63 [16]	--	.21 [5]	1.94 [49]	.25 [6]	.31 [8]	.08 [2]	.26 [7]	7 OR 374	BLUE	W5CRT X5CRT W5CVT (1)	X5CRT W5CVT (1)	(1 CRIMP)	U5CRT (1)	U5CRT (1)	U5CRT (1)	MECHANICAL: MY29-11 (1) HYDRAULIC: PAT81KFT(1) YA81KFT(1)	9/16"
YAV6CL2TC10FX45					2				.78 [20]		1.91 [49]														
YAV6CL2TC10FX90 (12)					3				.91 [23]		1.39 [35]														
YAV6CL2TC10E2FX				#10	1		.48 [12]	.75 [19]	--	.21 [5]	2.06 [52]	.25 [6]		.08 [2]	.26 [7]										
YAV6CL2TC10E2FX45					2				.78 [20]		2.02 [51]														
YAV6CL2TC10E2FX90 (12)					3				.90 [23]		1.57 [40]														
YAV6CL2TC10E4FX				#10	1		.45 [11]	.69 [17]	--	.21 [5]	2.00 [51]	.25 [6]	.31 [8]	.08 [2]	.26 [7]										
YAV6CL2TC10E4FX45					2				.78 [20]		1.98 [50]														
YAV6CL2TC10E4FX90 (12)					3				.91 [23]		1.46 [37]														
YAV6CL2TC10E9FX				#10	1		.48 [12]	.50 [13]	--	.21 [5]	1.81 [46]	.25 [6]	.31 [8]	.08 [2]	.26 [7]										
YAV6CL2TC10E9FX45					2				.78 [20]		1.77 [45]														
YAV6CL2TC10E9FX90 (12)					3				.90 [23]		1.27 [32]														
YAV6CL2TC14FX				1/4	1		.48 [12]	.63 [16]	--	.27 [7]	2.06 [52]	.31 [8]		.08 [2]	.34 [9]										
YAV6CL2TC14FX45					2				.78 [20]		2.02 [51]														
YAV6CL2TC14FX90 (12)					3				.90 [23]		1.52 [39]														
YAV6CL2TC14E1FX				1/4	1		.48 [12]	1.00 [25]	--	.27 [7]	2.44 [62]	.31 [8]		.08 [2]	.34 [9]										
YAV6CL2TC14E1FX45					2				.78 [20]		2.40 [61]														
YAV6CL2TC14E1FX90 (12)					3				.90 [23]		1.89 [48]														
YAV6CL2TC14E2FX				1/4	1		.48 [12]	.75 [19]	--	.27 [7]	2.16 [55]	.31 [8]		.08 [2]	.34 [9]										
YAV6CL2TC14E2FX45					2				.78 [20]		2.15 [55]														
YAV6CL2TC14E2FX90 (12)					3				.90 [23]		1.64 [42]														
YAV6CL2TC516FX				5/16	1		.52 [13]	1.00 [25]	--	.33 [8]	2.50 [63]	.34 [9]		.07 [2]	.37 [9]										
YAV6CL2TC516FX45					2				.78 [20]		2.45 [62]														
YAV6CL2TC516FX90 (12)					3				.89 [23]		1.95 [49]														
YAV6CL2TC38FX				3/8	1		.58 [15]	1.00 [25]	--	.40 [10]	2.62 [67]	.41 [10]		.06 [2]	.43 [11]										
YAV6CL2TC38FX45					2				.77 [19]		2.56 [65]														
YAV6CL2TC38FX90 (12)					3				.87 [22]		2.07 [53]														
YAV6CL2NTCFX				1/2	1		.83 [21]	1.75 [44]	--	.56 [14]	3.81 [97]	.62 [16]		.12 [3]	.65 [17]										
YAV6CL2NTCFX45					2				.80 [20]		3.67 [93]														
YAV6CL2NTCFX90 (12)					3				.98 [25]		3.29 [84]														
YAV6CL2TC14FX135	#6 CLASS G,H,I,K,M DLO 61/24	#6 AWG	30	1/4	4	.50 [13]	.48 [12]	.63 [16]	.61 [15]	.27 [7]	2.19 [56]	.31 [8]	.31 [8]	.08 [2]	.34 [9]	7 OR 374	BLUE	W5CRT X5CRT W5CVT (1)	X5CRT W5CVT (1)	(1 CRIMP)	U5CRT (1)	U5CRT (1)	U5CRT (1)		9/16"
YAV6CL2NT10E2FX				#10	1		.44 [11]	.75 [19]	--	.21 [5]	2.06 [52]	.25 [6]		.08 [2]	.26 [7]										

SEE SHEET 1 OF 19 FOR NOTES

TO ORDER BURNDY® PRODUCTS CALL

UNITED STATES
1-800-346-4175 (LONDONDERRY, NH)

CANADA:
1-800-361-6975 (QUEBEC)
1-800-387-6487 (ALL OTHER PROVINCES)

FOR PRODUCT INFO: http://www.burndy.com

HYLUG™

ITEM NO:	N/A	
CAT. NO:	YAV6CL-2-TC-FX- (TABLE)	
DRAWN BY:	D.FILLION	12/04/92
CHECKER:	K.HENRY	12/10/92
DSN APPVL:	C.PALAGI	12/14/92
MFG APPVL:	N/A	--
QA APPVL:	A.LLOYD	12/11/92
MKT APPVL:	--	--
PROD FAM:	--	
PROJECT #:	--	
DOCUMENT TYPE:	Sales	
REL LEVEL:	In Work	

BURNDY

SCALE: NTS

DRAWING NO	REV
SE208119	V

SIZE D

SHEET 3 OF 19

REV: PE0200

DRAWING NO. SE208119

REV	DATE	DESCRIPTION	ECO	BY	C'H'K.
V	2018-08-10 11:05:00 EDT	UPDATE AS PER MARKUP	49615	RB	VS

CATALOG NO.	CONDUCTOR FLEX	CONDUCTOR CODE (AWG)	CONDUCTOR NAVY (5)	BOLT SIZE	FIG. NO.	DIMENSIONS B	C	E	H	K	L	N	O.D.	T REF.	Z MIN.	INSTALLATION TOOLING (# CRIMPS) DIE INDEX	COLOR CODE	MECHANICAL MD7-34R	MECHANICAL OUR840	MECHANICAL Y2MR (2) (6)	HYDRAULIC BCT500 Y500CT	HYDRAULIC Y35, Y39 Y750, BAT35 BAT750, PAT750	HYDRAULIC Y46 (4)	HYDRAULIC Y45 (3)	DIELESS (# CRIMPS)	WIRE STRIP LENGTH
YAV4CL2NTI0FX	#4 CLASS G,H,I, K,M DLO 105/24	#4 AWG	40 & 50	#10 [M5]	1	.50 [13]	.41 [10]	.63 [16]	--	.21 [5]	1.95 [50]	.25 [6]	.38 [10]	.09 [2]	.27 [7]	8 OR 346	GRAY	W4CRT X4CRT W4CVT (1)	X4CRT W4CVT (1)	(2 CRIMP)	W4CRT X4CRT W4CVT (1)	U4CRT (1)	U4CRT (1)	U4CRT (1)	MECHANICAL: MY29-11 (1) HYDRAULIC: PAT81KFT(1) YA81KFT(1)	9/16"
YAV4CL2NTI0FX45					2				.84 [21]		1.94 [49]															
YAV4CL2NTI0FX90 (12)					3				.94 [24]		1.43 [36]															
YAV4CL2NTI0EIFX				#10 [M5]	1		.41 [10]	1.00 [25]	--	.21 [5]	2.33 [59]	.25 [6]		.09 [2]	.27 [7]											
YAV4CL2NTI0EIFX45					2				.84 [21]		2.31 [59]															
YAV4CL2NTI0EIFX90 (12)					3				.94 [24]		1.80 [46]															
YAV4CL2TCI4FX				1/4 [M6]	1		.55 [14]	.63 [16]	--	.27 [7]	2.08 [53]	.31 [8]		.09 [2]	.34 [9]											
YAV4CL2TCI4FXNK (2)									--		2.08 [53]															
YAV4CL2TCI4FX45					2				.84 [21]		2.06 [52]															
YAV4CL2TCI4FX90 (12)					3				.94 [24]		1.55 [39]															
YAV4CL2TCI4E2FX				1/4 [M6]	1		.55 [14]	.75 [19]	--	.27 [7]	2.20 [56]	.31 [8]		.09 [2]	.34 [9]											
YAV4CL2TCI4E2FX45					2				.84 [21]		2.19 [56]															
YAV4CL2TCI4E2FX90 (12)					3				.94 [24]		1.68 [43]															
YAV4CL2TCI4EIFX				1/4 [M6]	1		.55 [14]	1.00 [25]	--	.27 [7]	2.45 [62]	.31 [8]		.09 [2]	.34 [9]											
YAV4CL2TCI4EIFX45					2				.84 [21]		2.44 [62]															
YAV4CL2TCI4EIFX90 (12)					3				.94 [24]		1.93 [49]															
YAV4CL2TC38FX				3/8 [M10]	1		.58 [15]	1.00 [25]	--	.40 [10]	2.68 [68]	.41 [10]		.08 [2]	.43 [11]											
YAV4CL2TC38FX45					2				.87 [22]		2.64 [67]															
YAV4CL2TC38FX90 (12)					3				.97 [25]		2.11 [54]															
YAV4CL2TC516FX				5/16 [M8]	1		.55 [14]	1.00 [25]	--	.33 [8]	2.52 [64]	.34 [9]		.09 [2]	.36 [9]											
YAV4CL2TC516FX45					2				.84 [21]		2.50 [64]															
YAV4CL2TC516FX90 (12)					3				.94 [24]		1.99 [51]															
YAV4CL2NTCFX				1/2 [M12]	1		.83 [21]	1.75 [44]	--	.56 [14]	3.87 [98]	.62 [16]		.12 [3]	.65 [17]											
YAV4CL2NTCFX45					2				.88 [22]		3.91 [99]															
YAV4CL2NTCFX90 (12)					3				1.04 [26]		3.32 [84]															
YAV4CL2TCI0FX				#10 [M5]	1		.55 [14]	.63 [16]	--	.21 [5]	1.95 [50]	.25 [6]		.09 [2]	.26 [7]											
YAV4CL2TCI0FX45					2				.84 [21]		1.94 [49]															
YAV4CL2TCI0FX90 (12)					3				.94 [24]		1.43 [36]															
YAV4CL2NTI4FX				1/4 [M6]	1		.45 [11]	.63 [44]	--	.27 [7]	2.08 [53]	.31 [8]		.09 [2]	.32 [8]											
YAV4CL2NTI4FX45					2				.84 [21]		2.06 [52]															
YAV4CL2NTI4FX90 (12)					3				.94 [24]		1.55 [39]															

SEE SHEET 1 OF 19 FOR NOTES

TO ORDER BURNDY® PRODUCTS CALL

UNITED STATES
1-800-346-4175 (LONDONDERRY, NH)

CANADA:
1-800-361-6975 (QUEBEC)
1-800-387-6487 (ALL OTHER PROVINCES)

FOR PRODUCT INFO: http://www.burndy.com

HYLUG™

ITEM NO:	N/A
CAT. NO:	YAV4CL-2-TC-FX- (TABLE)
DRAWN BY:	D.FILLION 12/04/82
CHECKER:	K.HENRY 12/10/82
DSN APPVL:	C.PALAGI 12/14/82
MFG APPVL:	N/A --
QA APPVL:	A.LLOYD 12/14/82
MKT APPVL:	-- --
PROD FAM:	--
PROJECT #:	--
DOCUMENT TYPE:	Sales
REL LEVEL:	In Work
SIZE	D
SCALE:	NTS
DRAWING NO	SE208119
REV	V
SHEET 4 OF 19	

BURNDY

REV: PE0200

DRAWING NO. SE208119

REV	DATE	DESCRIPTION	ECO	BY	C'H'K.
V	01/19/2015 12:00:00 AM	UPDATE AS PER MARKUP	49615	RB	VS

CATALOG NO.	ITEM NO.	BOLT SIZE	CONDUCTOR FLEX	CONDUCTOR CODE (AWG)	CONDUCTOR NAVY 5	FIG. NO.	DIMENSIONS B	C	E	H	K	L	N	O.D.	T REF.	Z MIN.	INSTALLATION TOOLING (# CRIMPS) DIE INDEX	COLOR CODE	MECHANICAL MD7-34R	OUR840	YIMRTC 6	HYDRAULIC BCT500 Y500CT PAT600	Y35,Y39,Y750 PAT750	Y46 4	Y45 3	DIELESS (# CRIMPS)	WIRE STRIP
YAV2CL2TC14FX	518441	1/4 [M6]	#2 CLASS G,H,I,K,M DLO 150/24	#2 AWG	60	1	.63 [16]	.68 [17]	.63 [16]	--	.27 [7]	2.26 [57]	.31 [8]	.46 [12]	.10 [3]	.34 [9]	10	BROWN	W2CRT X2CRT W2CVT (1)	X2CRT W2CVT (1)	(2 CRIMP)	W2CRT X2CRT W2CVT (1)	U2CRT (1)	U2CRT (1)	U2CRT (1)	MECHANICAL: MY29-11 (1) HYDRAULIC: Y644M (1) PAT644M (1) PAT811KFT(1) YA811KFT(1) PAT444(1)	11/16"
YAV2CL2TC14FX45	518442					2				1.04 [26]		2.22 [56]															
YAV2CL2TC14FX90	518443					3				1.15 [29]		1.60 [41]															
YAV2CL2TC14E1FX	518626	1/4 [M6]				1		.68 [17]	1.00 [25]	--	.27 [7]	2.63 [67]	.31 [8]		.10 [3]	.34 [9]											
YAV2CL2TC14E1FX45	25014657					2				1.04 [26]		2.60 [66]															
YAV2CL2TC14E1FX90	001380					3				1.15 [29]		1.98 [50]															
YAV2CL2TC14E2FX	518444	1/4 [M6]				1		.68 [17]	.75 [19]	--	.27 [7]	2.38 [60]	.31 [8]		.10 [3]	.34 [9]											
YAV2CL2TC14E2FX45	10016253					2				1.04 [26]		2.34 [59]															
YAV2CL2TC14E2FX90	25018965					3				1.15 [29]		1.73 [44]															
YAV2CL2TC38FX	518445	3/8 [M10]				1		.68 [17]	1.00 [25]	--	.40 [10]	2.82 [72]	.41 [10]		.10 [3]	.43 [11]											
YAV2CL2TC38FX45	518446					2				1.04 [26]		2.78 [71]															
YAV2CL2TC38FX90	518447					3				1.15 [29]		2.17 [55]															
YAV2CL2TC516FX	002689	5/16 [M8]				1		.68 [17]	1.00 [25]	--	.33 [8]	2.71 [69]	.34 [9]		.10 [3]	.36 [9]											
YAV2CL2TC516FX45	26002575					2				1.04 [26]		2.70 [69]															
YAV2CL2TC516FX90	26002017					3				1.15 [29]		2.04 [52]															
YAV2CL2NTCFX	518637	1/2 [M12]				1		.83 [21]	1.75 [44]	--	.56 [14]	4.07 [103]	.62 [16]		.08 [2]	.65 [17]											
YAV2CL2NTCFX45	10016252					2				1.03 [26]		3.93 [100]															
YAV2CL2NTCFX90	26001303					3				1.11 [28]		3.34 [85]															
YAV2CL2NT10FX	518632	#10 [M5]				1		.48 [12]	.63 [16]	--	.21 [5]	2.14 [54]	.25 [6]		.10 [3]	.27 [7]											
YAV2CL2NT10E2FX	50055351								.75 [19]			2.26 [57]															
YAV2CL2NT10FX90	10043232	#10 [M5]				3		.48 [12]	.63 [16]	1.15 [29]	.21 [5]	1.48 [38]	.25 [6]		.10 [3]	.27 [7]											
YAV2CL2NT14FX	26001625	1/4 [M6]				1		.48 [12]	.63 [16]	--	.27 [7]	2.26 [57]	.31 [8]		.10 [3]	.34 [9]											
YAV2CL2NT14FX45	50004389					2		.48 [12]	.63 [16]	1.04 [26]	.27 [7]	2.22 [56]	.31 [8]		.10 [3]	.34 [9]											
YAV2CL2NT14FX90	10088711					3		.48 [12]	.63 [16]	1.15 [29]	.27 [7]	1.60 [41]	.31 [8]		.10 [3]	.34 [9]											
YAV2CL2NT14E1FX	10019369	1/4 [M6]				1		.48 [12]	1.00 [25]	--	.27 [7]	2.63 [67]	.31 [8]		.10 [3]	.34 [9]											
YAV2CL2TC10FX	10030369	#10 [M5]	#2 CLASS G,H,I,K,M DLO 150/24	#2 AWG	60	1	.63 [16]	.68 [17]	.63 [16]	--	.21 [5]	2.14 [54]	.25 [6]	.46 [12]	.10 [3]	.27 [7]	10	BROWN	W2CRT X2CRT W2CVT (1)	X2CRT W2CVT (1)	(2 CRIMP)	W2CRT X2CRT W2CVT (1)	U2CRT (1)	U2CRT (1)	U2CRT (1)		11/16"
YAV2CL2TC10FX45	10030413					2				1.04 [26]		2.09 [53]															
YAV2CL2TC10FX90	10030414					3				1.15 [29]		1.48 [38]															

SEE SHEET 1 OF 19 FOR NOTES

TO ORDER BURNDY® PRODUCTS CALL

UNITED STATES
1-800-346-4175 (LONDONDERRY, NH)

CANADA:
1-800-361-6975 (QUEBEC)
1-800-387-6487 (ALL OTHER PROVINCES)

FOR PRODUCT INFO: http://www.burndy.com

HYLUG™

ITEM NO:	(TABLE)
CAT. NO:	YAV2CL-2TC-FX- (TABLE)
DRAWN BY:	D.FILLION 12/04/92
CHECKER:	K.HENRY 12/10/92
DSN APPVL:	C.PALAGI 12/14/92
MFG APPVL:	N/A --
QA APPVL:	A.LLOYD 12/14/92
MKT APPVL:	T.NELSON 12/14/92
PROD FAM:	--
PROJECT #:	--
DOCUMENT TYPE:	Sales
REL LEVEL:	In Work
SIZE	D
SCALE:	NTS
DRAWING NO	SE208119
REV	V
SHEET	5 OF 19

BURNDY

REV: PE0200

REV	DATE	DESCRIPTION	ECO	BY	CHK.
V	2018-08-10 11:05:00 EDT	UPDATE AS PER MARKUP	49615	RB	VS

CATALOG NO.	CONDUCTOR FLEX	CONDUCTOR CODE (AWG)	CONDUCTOR NAVY 5	BOLT SIZE	FIG. NO.	DIMENSIONS B	C	E	H	K	L	N	O.D.	T REF.	Z MIN.	INSTALLATION TOOLING (# CRIMPS) DIE INDEX	COLOR CODE	MECHANICAL MD7-34R	MECHANICAL OUR840	HYDRAULIC BCT500 Y500CT PAT600	HYDRAULIC Y35,BAT35 BAT750,Y39 Y750,PAT750	HYDRAULIC Y46 4	HYDRAULIC Y45 3	DIELESS (# CRIMPS)	WIRE STRIP LENGTH
YAVICL2NT14FX	#1 CLASS G,H,I, K,M DLO 225/24	#1 AWG	75	1/4 [M6]	1	.62 [16]	.50 [13] MAX	.63 [16]	--	.27 [7]	2.28 [58]	.31 [8]	.51 [13]	.12 [3]	.34 [9]	11 OR 375	GREEN	WICRT XICRT WICVT (1)	XICRT WICVT (1)	WICRT XICRT WICVT (1)	UICRT-1 (1)	UICRT-1 (1)	UICRT-1 (1)	MECHANICAL: MY29-1(1) HYDRAULIC: Y644M (1) BAT644M (1) PAT644M (1) PAT81KFT(1) YA81KFT(1) PAT444(1)	11/16"
YAVICL2NT14FX45					2				1.10 [28]		2.28 [58]														
YAVICL2NT14FX90					3				1.20 [30]		1.64 [42]														
YAVICL2TC14FX				1/4 [M6]	1		.75 [19]	.63 [16]	--	.27 [7]	2.28 [58]	.31 [8]			.34 [9]										
YAVICL2TC14FX45					2				1.10 [28]		2.28 [58]														
YAVICL2TC14FX90					3				1.20 [30]		1.64 [42]														
YAVICL2TC14E2FX				1/4 [M6]	1			.75 [19]	--	.27 [7]	2.41 [61]	.31 [8]			.34 [9]										
YAVICL2TC14E2FX45					2				1.10 [28]		2.40 [61]														
YAVICL2TC14E2FX90					3				1.20 [30]		1.76 [45]														
YAVICL2TC14E1FX				1/4 [M6]	1			1.00 [25]	--	.27 [7]	2.65 [67]	.31 [8]			.34 [9]										
YAVICL2TC14E1FX45					2				1.10 [28]		2.64 [67]														
YAVICL2TC14E1FX90					3				1.20 [30]		2.00 [51]														
YAVICL2TC5I6FX				5/16 [M8]	1			1.00 [25]	--	.33 [8]	2.72 [69]	.34 [9]			.36 [9]										
YAVICL2TC5I6FX45					2				1.10 [28]		2.71 [69]														
YAVICL2TC5I6FX90					3				1.20 [30]		2.08 [53]														
YAVICL2TC38FX				3/8 [M10]	1			1.00 [25]	--	.41 [10]	2.85 [72]	.41 [10]			.43 [11]										
YAVICL2TC38FX45					2				1.10 [28]		2.84 [72]														
YAVICL2TC38FX90					3				1.20 [30]		2.20 [56]														
YAVICL2TC38E10FX				3/8 [M10]	1		.75 [19]	1.25 [32]	--	.41 [10]	3.10 [79]	.41 [10]		.12 [3]	.43 [11]										
YAVICL2TC38E10FX45					2				1.10 [28]		3.09 [78]														
YAVICL2TC38E10FX90					3				1.20 [30]		2.45 [62]														
YAVICL2NTCFX	#1 CLASS G,H,I, K,M DLO 225/24	#1 AWG	75	1/2 [M12]	1	.62 [16]	.83 [21]	1.75 [44]	--	.56 [14]	4.04 [103]	.62 [16]	.51 [13]	.11 [3]	.65 [17]	11 OR 375	GREEN	WICRT XICRT WICVT (1)	XICRT WICVT (1)	WICRT XICRT WICVT (1)	UICRT-1 (1)	UICRT-1 (1)	UICRT-1 (1)		11/16"
YAVICL2NTCFX45					2				1.09 [28]		4.00 [102]														
YAVICL2NTCFX90					3				1.18 [30]		3.38 [86]														

SEE SHEET 1 OF 19 FOR NOTES

TO ORDER BURNDY® PRODUCTS CALL

UNITED STATES
1-800-346-4175 (LONDONDERRY, NH)

CANADA:
1-800-361-6975 (QUEBEC)
1-800-387-6487 (ALL OTHER PROVINCES)

FOR PRODUCT INFO: http://www.burndy.com

HYLUG™

ITEM NO:	N/A
CAT. NO:	YAVICL-2-TC-FX- (TABLE)
DRAWN BY:	D.FILLION 12/04/92
CHECKER:	K.HENRY 12/10/92
DSN APPVL:	C.PALAGI 12/14/92
MFG APPVL:	N/A --
QA APPVL:	A.LLOYD 12/24/92
MKT APPVL:	T.NELSON 12/14/92
PROD FAM:	--
PROJECT #:	--
DOCUMENT TYPE:	Sales
REL LEVEL:	In Work
SIZE	D
DRAWING NO	SE208119
REV	V
SCALE:	NTS
SHEET	6 OF 19

BURNDY

DRAWING NO. SE208119

REV	DATE	DESCRIPTION	ECO	BY	C'H'K.
V	2018-08-10 11:05:00 EDT	UPDATE AS PER MARKUP	49615	RB	VS

CATALOG NO.	FIG. NO.	CONDUCTOR FLEX	CONDUCTOR CODE (AWG)	CONDUCTOR NAVY 5	BOLT SIZE	DIMENSIONS B	C	E	H	K	L	N	O.D.	T REF.	Z MIN.	INSTALLATION TOOLING (# OF CRIMPS) DIE INDEX	COLOR CODE	MECHANICAL MD7-34R	MECHANICAL OUR840	HYDRAULIC BCT500 Y500CT	HYDRAULIC Y35,Y39,Y750, BAT35,BAT750, PAT750	HYDRAULIC Y46 4	HYDRAULIC Y45 3	DIELESS (# CRIMPS)	WIRE STRIP LENGTH
YAV25L2NTI4FX	1	CLASS G,H,I,K,M DLO 275/24	1/0 AWG	100	1/4	.69 [18]	.64 [16]	.63 [16]	--	.27 [7]	2.39 [61]	.31 [8]	.56 [14]	.12 [3]	.34 [9]	12 OR 348	PINK	W25RT X25RT W25VT (2)	X25RT W25VT (2)	W25RT X25RT W25VT (2)	U25RT UR4204WE (1)	U25RT UR4204WE (1)	U25RT UR4204WE (1)	MECHANICAL: MY29-11 (1) HYDRAULIC: Y644M (1) BAT644M (1) PAT644M (1)	11/16"
YAV25L2TCI4FX	1						.83 [21]		--		2.39 [61]														
YAV25L2TCI4FX45	2								1.20 [31]		2.35 [60]														
YAV25L2TCI4FX90	3								1.31 [33]		1.66 [42]														
YAV25L2TCI4E2FX	1				1/4			.75 [19]	--	.27 [7]	2.51 [64]	.31 [8]			.34 [9]										
YAV25L2TCI4E2FX45	2								1.20 [31]		2.47 [63]														
YAV25L2TCI4E2FX90	3								1.31 [33]		1.79 [45]														
YAV25L2TC5I6E2FX	1				5/16			.75 [19]	--	.33 [8]	2.57 [65]	.34 [9]			.36 [9]										
YAV25L2TC5I6E2FX45	2								1.20 [31]		2.53 [64]														
YAV25L2TC5I6E2FX90	3								1.31 [33]		1.85 [47]														
YAV25L2TC5I6E6FX	1				5/16			.88 [22]	--	.33 [8]	2.70 [69]	.34 [9]			.36 [9]										
YAV25L2TC5I6E6FX45	2								1.20 [31]		2.66 [68]														
YAV25L2TC5I6E6FX90	3								1.31 [33]		1.98 [50]														
YAV25L2TC5I6FX	1				5/16			1.00 [25]	--	.33 [8]	2.82 [72]	.34 [9]			.36 [9]										
YAV25L2TC5I6FX45	2								1.20 [31]		2.78 [71]														
YAV25L2TC5I6FX90	3								1.31 [33]		2.10 [53]														
YAV25L2TC38FX	1				3/8			1.00 [25]	--	.40 [10]	2.95 [75]	.41 [10]			.43 [11]										
YAV25L2TC38FX45	2								1.20 [31]		2.91 [74]														
YAV25L2TC38FX90	3								1.31 [33]		2.23 [57]														
YAV25L2NTCFX	1				1/2			1.75 [44]	--	.56 [14]	4.14 [105]	.63 [16]			.66 [17]										
YAV25L2NTCFX45	2								1.20 [31]		4.10 [104]														
YAV25L2NTCFX90	3								1.31 [33]		3.41 [87]														
YAV25L2TCI2EIFX	1				1/2			1.00 [25]	--	.53 [13]	3.20 [81]	.53 [13]			.56 [14]										
YAV25L2TCI2EIFX45	2								1.20 [31]		3.16 [80]														
YAV25L2TCI2EIFX90	3								1.31 [33]		2.48 [63]														
YAV25L2TCI4EIFX	1				1/4		.83 [21]	1.00 [25]	--	.27 [7]	2.76 [70]	.31 [8]			.34 [9]										
YAV25L2TCI4EIFX45	2								1.20 [31]		2.72 [69]														
YAV25L2TCI4EIFX90	3								1.31 [33]		2.04 [52]														
YAV25L2NTI4EIFX	1				1/4		.64 [16]	1.00 [25]	--	.27 [7]	2.76 [70]	.31 [8]			.34 [9]										
YAV25L2NTI4EIFX45	2								1.20 [31]		2.72 [69]														
YAV25L2NTI4EIFX90	3								1.31 [33]		2.04 [52]														

SEE SHEET 1 OF 19 FOR NOTES & VIEWS

TO ORDER BURNDY® PRODUCTS CALL

UNITED STATES
1-800-346-4175 (LONDONDERRY, NH)

CANADA:
1-800-361-6975 (QUEBEC)
1-800-387-6487 (ALL OTHER PROVINCES)

FOR PRODUCT INFO: http://www.burndy.com

HYLUG™

ITEM NO:	N/A
CAT. NO:	YAV25L- 2--- (TABLE)
DRAWN BY:	D.FILLION 12/07/92
CHECKER:	K.HENRY 12/10/92
DSN APPVL:	C.PALAGI 12/14/92
MFG APPVL:	N/A --
QA APPVL:	A.LLOYD 12/14/92
MKT APPVL:	-- --
PROD FAM:	--
PROJECT #:	--
DOCUMENT TYPE:	Sales
REL LEVEL:	In Work

BURNDY

SCALE: NTS

SIZE	DRAWING NO	REV
D	SE208119	V

SHEET 7 OF 19

REV: PE0200

DRAWING NO. SE208119

REV	DATE	DESCRIPTION	ECO	BY	C'H'K.
V	2018-08-10 11:05:00 EDT	UPDATE AS PER MARKUP	49615	RB	VS

CATALOG NO.	CONDUCTOR FLEX	CONDUCTOR CODE (AWG)	CONDUCTOR NAVY 5	BOLT SIZE	FIG. NO.	DIMENSIONS B	C	E	H	K	L	N	O.D.	T REF.	Z MIN.	INSTALLATION TOOLING (# OF CRIMPS) DIE INDEX	COLOR CODE	MECHANICAL RATCHET MD7-34R MD6	MECHANICAL RATCHET OUR840	HYDRAULIC Y500CT PAT600	HYDRAULIC Y750,Y35 Y39 PAT750	HYDRAULIC Y46 PAT46 4	HYDRAULIC Y45 3	DIELESS (# CRIMPS)	WIRE STRIP LENGTH
YAV26L2NTI4FX	2/0 AWG CLASS G,H,I,K,M DLO 325/24	2/0 AWG	I25	I/4	I	.8I [2I]	.76 [I9]	.63 [I6]	--	.27 [7]	2.56 [65]	.3I [8]	.63 [I6]	.I3 [3]	.34 [9]	I3	BLACK	W26RT X26RT W26VT (2)	X26RT W26VT (2)	W26RT X26RT W26VT (2)	U26RT (I)	U26RT (I)	U26RT (I)	MECHANICAL: MY29-II (I) HYDRAULIC: Y644M (I) PAT644 (I) Y8IKFT (I) PAT8IKFT (I) Y4PC834 (I) PAT4PC834 (I) PAT444(I)	I3/I6"
YAV26L2TCI4FX					I		.93 [24]		--		2.56 [65]														
YAV26L2TCI4FX45					2				I.38 [35]		2.49 [63]														
YAV26L2TCI4FX90					3				I.49 [38]		I.70 [43]														
YAV26L2TCI4EIFX					I			I.00 [25]	--	.27 [7]	2.93 [74]	.3I [8]			.34 [9]										
YAV26L2TCI4E2FX					I			.75 [I9]	--	.27 [7]	2.68 [68]	.3I [8]			.34 [9]										
YAV26L2TCI4E2FX45					2				I.38 [35]		2.6I [66]														
YAV26L2TCI4E2FX90					3				I.49 [38]		I.83 [46]														
YAV26L2TC5I6FX				5/I6	I		.93 [24]	I.00 [25]	--	.33 [8]	2.99 [76]	.34 [9]			.36 [9]										
YAV26L2TC5I6FX45					2				I.38 [35]		2.93 [74]														
YAV26L2TC5I6FX90					3				I.49 [38]		2.I4 [54]														
YAV26L2NT38FX				3/8	I		.63 [I6]	I.00 [25]	--	.4I [I0]	3.23 [82]	.4I [I0]			.43 [II]										
YAV26L2NT38FX45					2				I.45 [37]		3.I3 [80]														
YAV26L2NT38FX90					3				I.70 [43]		2.26 [57]														
YAV26L2TC38FX					I		.93 [24]	I.00 [25]	--	.4I [I0]	3.I2 [79]	.4I [I0]			.43 [II]										
YAV26L2TC38FX45					2				I.38 [35]		3.05 [77]														
YAV26L2TC38FX90					3				I.49 [38]		2.26 [58]														
YAV26L2TCI2EIFX				I/2	I			I.00 [25]	--	.53 [I3]	3.37 [86]	.53 [I3]			.56 [I4]										
YAV26L2TCI2EIFX45					2				I.38 [35]		3.30 [84]														
YAV26L2TCI2EIFX90					3				I.49 [38]		2.5I [64]														
YAV26L2NTCFX	2/0 AWG CLASS G,H,I,K,M DLO 325/24	2/0 AWG	I25		I	.8I [2I]	.93 [24]	I.75 [44]	--	.56 [I4]	4.3I [I09]	.63 [I6]	.63 [I6]	.I3 [3]	.65 [I7]	I3	BLACK	W26RT X26RT W26VT (2)	X26RT W26VT (2)	W26RT X26RT W26VT (2)	U26RT UR5I84WE (I)	U26RT UR5I84WE (I)	U26RT UR5I84WE (I)		I3/I6"
YAV26L2NTCFX45					2				I.38 [35]		4.24 [I08]														
YAV26L2NTCFX90					3				I.49 [38]		3.45 [88]														
YAV26L2TC38EI0FX				3/8	I			I.25 [32]	--	.4I [I0]	3.37 [86]	.4I [I0]			.42 [II]										

SEE SHEET I OF I9 FOR NOTES

TO ORDER BURNDY® PRODUCTS CALL

UNITED STATES
I-800-346-4I75 (LONDONDERRY, NH)

CANADA:
I-800-36I-6975 (QUEBEC)
I-800-387-6487 (ALL OTHER PROVINCES)

FOR PRODUCT INFO: http://www.burndy.com

HYLUG™

ITEM NO:	N/A	
CAT. NO:	YAV26L-2-TC-FX	
DRAWN BY:	D.FILLION	I2/7/92
CHECKER:	K.HENRY	I2/I0/92
DSN APPVL:	C.PALAGI	I2/I4/92
MFG APPVL:	N/A	--
QA APPVL:	A.LLOYD	I2/I4/92
MKT APPVL:	T.NELSON	I2/I4/92
PROD FAM:	--	
PROJECT #:	--	
DOCUMENT TYPE:	Sales	
REL LEVEL:	In Work	

BURNDY

SCALE: NTS

SIZE	DRAWING NO	REV
D	SE208119	V
	SHEET 8 OF I9	

REV: PE0200

REV	DATE	DESCRIPTION	ECO	BY	CHK.
V	2018-08-10 11:05:00 EDT	UPDATE AS PER MARKUP	49615	RB	VS

CATALOG NO.	CONDUCTOR FLEX	CONDUCTOR CODE (AWG)	CONDUCTOR NAVY 5	BOLT SIZE	FIG. NO.	DIMENSIONS B	C	E	H	K	L	N	O.D.	T REF.	Z MIN.	INSTALLATION TOOLING (# OF CRIMPS) DIE INDEX	COLOR CODE	MECHANICAL MD7-34R	MECHANICAL OUR840	MECHANICAL BCT500 Y500CT	HYDRAULIC Y35,Y39,Y750 BAT35,BAT750	HYDRAULIC Y46 4	HYDRAULIC Y45 3	DIELESS (# CRIMPS)	WIRE STRIP LENGTH
YAV27L2TC14FX	3/0 AWG CLASS G,H,I,K,M DLO 450/24	3/0 AWG	150	1/4	1	1.00 [25]	1.03 [26]	.63 [16]	--	.27 [7]	2.79 [71]	.31 [8]	.70 [18]	.14 [4]	.34 [9]	14	ORANGE	W27RT (2) X27RT (3) W27VT (2)	X27RT (3) W27VT (2)	W27RT (2) X27RT (3) W27VT (2)	U27RT (1)	U27RT (1)	U27RT (1)	MECHANICAL: MY29-11 (1) HYDRAULIC: Y644M (1) BAT644M (1) PAT81KFT(1) YA81KFT(1) PAT444(1)	1"
YAV27L2TC14FX45					2				1.59 [40]		2.67 [67]														
YAV27L2TC14FX90					3				1.74 [44]		1.74 [44]														
YAV27L2TC14E2FX					1			.75 [19]	--	.27 [7]	2.91 [74]	.31 [8]			.34 [9]										
YAV27L2TC14E2FX45					2				1.59 [40]		2.80 [71]														
YAV27L2TC14E2FX90					3				1.74 [44]		1.86 [47]														
YAV27L2TC516FX				5/16	1			1.00 [25]	--	.33 [8]	3.22 [82]	.34 [9]			.36 [9]										
YAV27L2TC516FX45					2				1.59 [40]		3.11 [79]														
YAV27L2TC516FX90					3				1.74 [44]		2.18 [55]														
YAV27L2TC38FX				3/8	1			1.00 [25]	--	.41 [10]	3.35 [85]	.41 [10]			.43 [11]										
YAV27L2TC38FX45					2				1.59 [40]		3.23 [82]														
YAV27L2TC38FX90					3				1.74 [44]		2.30 [58]														
YAV27L2TC38E16FX					1		1.03 [26]	1.75 [44]	--		4.10 [104]														
YAV27L2TC38E16FX45					2				1.59 [40]		3.98 [101]														
YAV27L2TC38E16FX90					3				1.74 [44]		3.05 [77]														
YAV27L2NT14FX				1/4	1		.76 [19]	.63 [16]	--	.27 [7]	2.79 [71]	.31 [8]			.34 [9]										
YAV27L2NTCFX				1/2	1		1.03 [26]	1.75 [44]	--	.56 [14]	4.54 [115]	.63 [16]			.65 [17]										
YAV27L2NTCFX45					2				1.59 [40]		4.42 [112]														
YAV27L2NTCFX90					3				1.74 [44]		3.49 [89]														
YAV27L2NTC516FX	3/0 AWG CLASS G,H,I,K,M DLO 450/24	3/0 AWG	150	5/16	1	1.00 [25]	1.03 [26]	1.75 [44]	--	.33 [8]	3.97 [101]	.34 [9]	.70 [18]	.14 [4]	.36 [9]	14	ORANGE	W27RT (2) X27RT (3) W27VT (2)	X27RT (3) W27VT (2)	W27RT (2) X27RT (3) W27VT (2)	U27RT (1)	U27RT (1)	U27RT (1)		1"
YAV27L2NTC516FX45					2				1.59 [40]		3.86 [98]														
YAV27L2NTC516FX90					3				1.74 [44]		2.93 [74]														

SEE SHEET 1 OF 19 FOR NOTES

TO ORDER BURNDY® PRODUCTS CALL

UNITED STATES
1-800-346-4175 (LONDONDERRY, NH)

CANADA:
1-800-361-6975 (QUEBEC)
1-800-387-6487 (ALL OTHER PROVINCES)

FOR PRODUCT INFO: http://www.burndy.com

HYLUG ™

ITEM NO:	N/A
CAT. NO:	YAV27L-2-TC-FX (TABLE)
DRAWN BY:	D.FILLION 12/07/92
CHECKER:	K.HENRY 12/10/92
DSN APPVL:	C.PALAGI 12/14/92
MFG APPVL:	N/A --
QA APPVL:	A.LLOYD 12/14/92
MKT APPVL:	-- --
PROD FAM:	--
PROJECT #:	--
DOCUMENT TYPE:	Sales
REL LEVEL:	In Work

BURNDY

SCALE: NTS

SIZE	DRAWING NO	REV
D	SE208119	V

SHEET 9 OF 19

REV: PE0200

DRAWING NO. SE208119

REV	DATE	DESCRIPTION	ECO	BY	C'H'K.
V	2018-08-10 11:05:00 EDT	UPDATE AS PER MARKUP	49615	RB	VS

CATALOG NO.	FIG. NO.	CONDUCTOR FLEX	CONDUCTOR CODE (AWG)	CONDUCTOR NAVY (5)	BOLT SIZE	DIMENSIONS B	C	E	H	K	L	N	O.D.	T REF.	Z MIN.	INSTALLATION TOOLING (# CRIMPS) DIE INDEX	COLOR CODE	MECHANICAL RATCHET MD7-34R	MECHANICAL RATCHET OUR840	HYDRAULIC Y750,Y35 Y39	HYDRAULIC Y46 (4)	HYDRAULIC Y45 (3)	DIELESS (# CRIMPS)	WIRE STRIP LENGTH
YAV28L2TC14FX	1	4/0 AWG CLASS G,H,I,K,M DLO 550/24	4/0 AWG	200	1/4	1.03 [26]	1.14 [29]	.63 [16]	-	.27 [7]	2.86 [73]	.31 [8]	.77 [20]	.15 [4]	.34 [9]	15	PURPLE	W28RT (2) X28RT (3) W28VT (2)	X28RT (3) W28VT (2)	U28RT (1)	U28RT (1)	U28RT (1)	MECHANICAL: MY29-11 (1) HYDRAULIC: Y644M (1) PAT81KFT(1) YA81KFT(1) PAT444(1)	1-1/16"
YAV28L2TC14FX45	2								1.70 [43]		2.74 [70]													
YAV28L2TC14FX90	3								1.83 [47]		1.78 [45]													
YAV28L2TC14E2FX	1				1/4			.75 [19]	-	.27 [7]	2.99 [76]	.31 [8]			.34 [9]									
YAV28L2TC14E2FX45	2								1.70 [43]		2.87 [73]													
YAV28L2TC14E2FX90	3								1.83 [47]		1.90 [48]													
YAV28L2TC516FX	1				5/16			1.00 [25]	-	.33 [8]	3.30 [84]	.34 [9]			.36 [9]									
YAV28L2TC516FX45	2								1.70 [43]		3.18 [81]													
YAV28L2TC516FX90	3								1.83 [47]		2.22 [56]													
YAV28L2TC38FX	1				3/8		1.14 [29]	1.00 [25]	-	.40 [10]	3.43 [87]	.41 [10]			.43 [11]									
YAV28L2TC38FX45	2								1.70 [43]		3.30 [84]													
YAV28L2TC38FX90	3								1.83 [47]		2.34 [59]													
YAV28L2NT38FX	1				3/8		.94 [24]	1.00 [25]	-	.40 [10]	3.43 [87]	.41 [10]			.43 [11]									
YAV28L2NT38FX45	2								1.70 [43]		3.30 [84]													
YAV28L2NT38FX90	3								1.83 [47]		2.34 [59]													
YAV28L2NTC38FX	1				3/8		1.14 [29]	1.75 [44]	-	.40 [10]	4.18 [106]	.41 [10]			.43 [11]									
YAV28L2NTC38FX45	2								1.70 [43]		4.05 [103]													
YAV28L2NTC38FX90	3								1.83 [47]		3.09 [78]													
YAV28L2TC12E1FX	1				1/2			1.00 [25]	-	.53 [13]	3.68 [93]	.53 [13]			.56 [14]									
YAV28L2TC12E1FX45	2								1.70 [43]		3.55 [90]													
YAV28L2TC12E1FX90	3								1.83 [47]		2.59 [66]													
YAV28L2TC12FX	1				1/2			1.25 [32]	-	.53 [13]	3.93 [100]	.53 [13]			.56 [14]									
YAV28L2TC12FX45	2								1.70 [43]		3.80 [97]													
YAV28L2TC12FX90	3								1.83 [47]		2.84 [72]													
YAV28L2NTCFX	1				1/2		1.14 [29]	1.75 [44]	-	.56 [14]	4.62 [117]	.63 [16]			.65 [17]									
YAV28L2NTCFX45	2								1.70 [43]		4.49 [114]													
YAV28L2NTCFX90	3								1.83 [47]		3.53 [90]													
YAV28L2ENT14FX	1	4/0 AWG CLASS G,H,I,K,M DLO 550/24	4/0 AWG	200	1/4	1.03 [26]	.76 [19]	.63 [16]	-	.27 [7]	2.86 [73]	.31 [8]	.77 [20]	.15 [4]	.34 [9]	15	PURPLE	W28RT (2) X28RT (3) W28VT (2)	X28RT (3) W28VT (2)	U28RT UR4205WE (1)	U28RT UR4205WE (1)	U28RT UR4205WE (1)	MECHANICAL: MY29-11 (1) HYDRAULIC: Y644M (1) PAT81KFT(1) YA81KFT(1) PAT444(1)	1-1/16"
YAV28L2ENT14FX45	2								1.70 [43]		2.74 [70]													
YAV28L2ENT14FX90	3								1.83 [47]		1.78 [45]													

SEE SHEET 1 OF 19 FOR NOTES

TO ORDER BURNDY® PRODUCTS CALL

UNITED STATES
1-800-346-4175 (LONDONDERRY, NH)

CANADA:
1-800-361-6975 (QUEBEC)
1-800-387-6487 (ALL OTHER PROVINCES)

FOR PRODUCT INFO: http://www.burndy.com

HYLUG™

ITEM NO:	N/A
CAT. NO:	YAV28L-2-TC-FX
DRAWN BY:	D.FILLION 12/07/92
CHECKER:	K.HENRY 12/10/92
DSN APPVL:	C.PALAGI 12/14/92
MFG APPVL:	N/A --
QA APPVL:	A.LLOYD 12/14/92
MKT APPVL:	-- --
PROD FAM:	--
PROJECT #:	--
DOCUMENT TYPE:	Sales
REL LEVEL:	In Work

BURNDY

SCALE: NTS

DRAWING NO	REV
SE208119	V

SIZE D

SHEET 10 OF 19

REV: PE0200

REV	DATE	DESCRIPTION	ECO	BY	C'H'K.
V	2018-08-10 11:05:00 EDT	UPDATE AS PER MARKUP	49615	RB	VS

CATALOG NO.	FIG. NO.	CONDUCTOR FLEX (10)	CONDUCTOR CODE (AWG)	CONDUCTOR NAVY (5)	BOLT SIZE	DIMENSIONS B	C	E	H	K	L	N	O.D.	T REF.	Z MIN.	BURNDY® INSTALLATION TOOLING (# CRIMPS) DIE INDEX	COLOR CODE	MECHANICAL MD7-34R	HYDRAULIC Y500CT PAT600	HYDRAULIC Y750, Y35 Y39, PAT750	HYDRAULIC Y46 (4)	HYDRAULIC Y45 (3)	DIELESS (# CRIMPS)	WIRE STRIP LENGTH
YA30L2TC516FX	1	250 FLEX CLASS G: 259 STR CLASS H: 427 STR	--	--	5/16	1.03 [26]	1.20 [30]	1.00 [25]	--	.33 [8]	3.32 [84]	.34 [9]	.81 [21]	.16 [4]	.35 [9]	16	YELLOW	W29VT (2)	W29VT (1)	U29RT (1)	U29RT (1)	U29RT (1)	HYDRAULIC: Y644M (1) BAT644M (1) PAT644M (1) Y81KFT (1) PAT81KFT (1) PAT444(1)	1-1/16"
YA30L2TC516FX45	2								1.75 [44]		3.23 [82]													
YA30L2TC516FX90	3								1.89 [48]		2.25 [57]													
YA30L2NT38FX	1				3/8		.960 [24]		--	.41 [10]	3.45 [88]	.41 [10]			.43 [11]									
YA30L2TC38FX	1						1.20 [30]		--		3.45 [88]													
YA30L2TC38FX45	2								1.75 [44]		3.36 [85]													
YA30L2TC38FX90	3								1.89 [48]		2.37 [60]													
YA30L2TC38E10FX	1							1.25 [32]	--		3.70 [94]													
YA30L2TC38E5FX	1							1.06 [27]	--	.41 [10]	3.51 [89]													
YA30L2TC38E5FX45	2								1.75 [45]		3.42 [87]													
YA30L2TC38E5FX90	3								1.89 [48]		2.43 [62]													
YA30L2TC12FX	1	250 FLEX CLASS G: 259 STR CLASS H: 427 STR			1/2			1.25 [32]	--	.53 [13]	3.95 [100]	.53 [13]			.56 [14]									
YA30L2TC12FX45	2								1.75 [44]		3.86 [98]													
YA30L2TC12FX90	3								1.89 [48]		2.87 [73]													
YA30L2NTCFX	1				1/2			1.75 [44]	--	.56 [14]	4.63 [118]	.63 [16]			.65 [17]									
YA30L2NTCFX45	2					1.03 [26]	1.20 [30]		1.75 [44]		4.55 [116]		.81 [21]	.16 [4]		16	YELLOW	W29VT (2)	W29VT (1)	U29RT (1)	U29RT (1)	U29RT (1)		1-1/16"
YA30L2NTCFX90	3		--	--					1.89 [48]		3.56 [90]													

SEE SHEET 1 OF 19 FOR NOTES

TO ORDER BURNDY® PRODUCTS CALL

UNITED STATES
1-800-346-4175 (LONDONDERRY, NH)

CANADA:
1-800-361-6975 (QUEBEC)
1-800-387-6487 (ALL OTHER PROVINCES)

FOR PRODUCT INFO: http://www.burndy.com

HYLUG™

ITEM NO:	N/A	
CAT. NO:	YA30L-2TC-FX (TABLE)	
DRAWN BY:	D.FILLION	12/07/82
CHECKER:	K.HENRY	12/10/82
DSN APPVL:	C.PALAGI	12/14/82
MFG APPVL:	N/A	--
QA APPVL:	A.LLOYD	12/14/82
MKT APPVL:	T.NELSON	12/14/82
PROD FAM:	--	
PROJECT #:	--	
DOCUMENT TYPE:	Sales	
REL LEVEL:	In Work	

BURNDY®

SCALE: NTS

SIZE: D

DRAWING NO: SE208119

REV: V

SHEET 11 OF 19

REV: PE0200

DRAWING NO. SE208119

REV	DATE	DESCRIPTION	ECO	BY	C'H'K.
V	2018-08-10 11:05:00 EDT	UPDATE AS PER MARKUP	49615	RB	VS

CATALOG NO.	FIG. NO.	CONDUCTOR FLEX	CONDUCTOR CODE (AWG)	CONDUCTOR NAVY 5	BOLT SIZE	DIMENSIONS B	C	E	H	K	L	N	O.D.	T REF.	Z MIN.	INSTALLATION TOOLING (# CRIMPS) DIE INDEX	COLOR CODE	MECHANICAL MD7-34R	HYDRAULIC BCT500 Y500CT	HYDRAULIC Y35,Y39 Y750 BAT750,PAT750	HYDRAULIC Y46 4	HYDRAULIC Y45 3	DIELESS (# CRIMPS)	WIRE STRIP LENGTH
YA31L2NT38FX	1	250 kcmil Flex CLASS I,K,M 262 DLO (650/24)	--	--	3/8 [M10]	1.06 [27]	.96 [24]	1.00 [25]	--	.41 [10]	3.51 [89]	.41 [10]	.88 [22]	.18 [4]	.43 [11]	17 OR 298	WHITE	W30VT (2)	W30VT (2)	U30RT (2)	U30RT (2)	U30RT (2)	HYDRAULIC: Y644M (1) BAT644M (1) PAT81KFT(1) YA81KFT(1) PAT444(1)	1-1/8"
YA31L2NT38FX45	2								1.85 [47]		3.43 [87]													
YA31L2NT38FX90	3								1.98 [50]		2.41 [52]													
YA31L2TC38FX	1				3/8 [M10]		1.29 [33]	1.00 [25]	--	.41 [10]	3.51 [89]	.41 [10]			.43 [11]									
YA31L2TC38FX45	2								1.85 [47]		3.43 [87]													
YA31L2TC38FX90	3								1.98 [50]		2.41 [52]													
YA31L2NT38E16FX	1				3/8 [M10]		.96 [24]	1.75 [44]	--	.41 [10]	4.26 [108]	.41 [10]			.43 [11]									
YA31L2NT38E16FX45	2								1.85 [47]		4.18 [106]													
YA31L2NT38E16FX90	3								1.98 [50]		3.16 [80]													
YA31L2NTC38FX	1				3/8 [M10]		1.29 [33]	1.75 [44]	--	.41 [10]	4.26 [108]	.41 [10]			.43 [11]									
YA31L2NTC38FX45	2								1.85 [47]		4.18 [106]													
YA31L2NTC38FX90	3								1.98 [50]		3.16 [80]													
YA31L2TC12FX	1				1/2 [M12]			1.25 [32]	--	.53 [13]	4.01 [102]	.53 [13]			.56 [14]									
YA31L2TC12FX45	2								1.85 [47]		3.93 [100]													
YA31L2TC12FX90	3								1.98 [50]		2.91 [74]													
YA31L2NTCFX	1	250 kcmil Flex CLASS I,K,M 262 DLO (650/24)	--	--	1/2 [M12]	1.06 [27]	1.29 [33]	1.75 [44]	--	.56 [14]	4.70 [119]	.63 [16]	.88 [22]	.18 [4]	.65 [17]	17 OR 298	WHITE	W30VT (2)	W30VT (2)	U30RT (2)	U30RT (2)	U30RT (2)		1-1/8"
YA31L2NTCFX45	2								1.85 [47]		4.62 [112]													
YA31L2NTCFX90	3								1.98 [50]		3.60 [91]													

SEE SHEET 1 OF 19 FOR NOTES

TO ORDER BURNDY® PRODUCTS CALL

UNITED STATES
1-800-346-4175 (LONDONDERRY, NH)

CANADA:
1-800-361-6975 (QUEBEC)
1-800-387-6487 (ALL OTHER PROVINCES)

FOR PRODUCT INFO: http://www.burndy.com

HYLUG™

ITEM NO:	N/A
CAT. NO:	YA31L-2-FX- (TABLE)
DRAWN BY:	D.FILLION 12/07/92
CHECKER:	K.HENRY 12/10/92
DSN APPVL:	C.PALAGI 12/14/92
MFG APPVL:	N/A --
QA APPVL:	A.LLOYD 12/14/92
MKT APPVL:	T.NELSON 12/14/92
PROD FAM:	--
PROJECT #:	--
DOCUMENT TYPE:	Sales
REL LEVEL:	In Work
SIZE	D
SCALE:	NTS
DRAWING NO	SE208119
REV	V
SHEET	12 OF 19

BURNDY

REV: PE0200

REV	DATE	DESCRIPTION	ECO	BY	CHK.
V	2018-08-10 11:05:00 EDT	UPDATE AS PER MARKUP	49615	RB	VS

CATALOG NO.	FIG. NO.	CONDUCTOR			BOLT SIZE	DIMENSIONS										BURNDY INSTALLATION TOOLING (# CRIMPS)							
		FLEX	CODE (AWG)	NAVY 5		B	C	E	H	K	L	N	O.D.	T REF.	Z MIN.	DIE INDEX	COLOR CODE	MECHANICAL RATCHET MD7-34R	HYDRAULIC Y750 Y35 Y39	HYDRAULIC Y46 4	HYDRAULIC Y45 3	DIELESS (# CRIMPS)	WIRE STRIP LENGTH
YA32L2NTCFX	1	300 kcmil Flex CLASS G,H1,K,M 313 DLO (775/24)	--	--	1/2	1.19 [30]	1.40 [36]	1.75 [44]	--	.56 [14]	4.88 [124]	.63 [16]	.95 [24]	.19 [5]	.65 [17]	18 OR 324	RED	W31VT (2)	U31RT (2)	U31RT (2)	U31RT (2)	HYDRAULIC: Y644M (1) PAT81KFT(1) YA81KFT(1) PAT444(1)	1-1/4"
YA32L2NTCFX45	2								2.03 [52]		4.78 [121]												
YA32L2NTCFX90	3								2.19 [56]		3.64 [93]												
YA32L2TC38FX	1	300 kcmil Flex CLASS G,H1,K,M 313 DLO (775/24)	--	--	3/8	1.19 [30]	1.40 [36]	1.00 [25]	--	.40 [10]	3.69 [94]	.41 [10]	.95 [24]	.19 [5]	.65 [17]	18 OR 324	RED	W31VT (2)	U31RT (2)	U31RT (2)	U31RT (2)	HYDRAULIC: Y644M (1) PAT81KFT(1) YA81KFT(1) PAT444(1)	1-1/4"
YA32L2TC38E2FX	1							.75 [19]			3.44 [87]												
YA32L2TC38E10FX	1							1.25 [32]			3.94 [100]												
YA32L2TC38FX45	2							1.00 [25]	2.03 [52]		3.59 [91]												
YA32L2TC38FX90	3								2.19 [56]		2.45 [62]												

SEE SHEET 1 OF 19 FOR NOTES

TO ORDER BURNDY® PRODUCTS CALL

UNITED STATES
1-800-346-4175 (LONDONDERRY, NH)

CANADA:
1-800-361-6975 (QUEBEC)
1-800-387-6487 (ALL OTHER PROVINCES)

FOR PRODUCT INFO: http://www.burndy.com

HYLUG™

ITEM NO:	N/A
CAT. NO:	YA32L-2NTC-FX- (TABLE)
DRAWN BY:	D.FILLION 12/07/92
CHECKER:	K.HENRY 12/10/92
DSN APPVL:	C.PALAGI 12/14/92
MFG APPVL:	N/A --
QA APPVL:	A.LLOYD 12/14/92
MKT APPVL:	T.NELSON 12/14/92
PROD FAM:	--
PROJECT #:	--
DOCUMENT TYPE:	Sales
REL LEVEL:	In Work
SIZE	D
DRAWING NO	SE208119
REV	V
SCALE:	NTS
SHEET	13 OF 19

BURNDY

REV: PE0200

REV	DATE	DESCRIPTION	ECO	BY	C'H'K.
V	2018-08-10 11:05:00 EDT	UPDATE AS PER MARKUP	49615	RB	VS

CATALOG NO.	FIG. NO.	CONDUCTOR FLEX	CONDUCTOR CODE (AWG)	CONDUCTOR NAVY 5	BOLT SIZE	B	C	E	H	K	L	N	O.D.	T. REF.	Z. MIN.	INSTALLATION TOOLING (# CRIMPS) DIE INDEX	COLOR CODE	MECHANICAL MD7-34R	HYDRAULIC BCT500 Y500CT PAT600	HYDRAULIC Y750,Y35 Y39,BAT35 BAT750,PAT750	HYDRAULIC Y46 PAT46 4	HYDRAULIC Y45 3	DIELESS (# CRIMPS)	WIRE STRIP LENGTH
YA34L2TC14FX	1	350 kcmil Flex CLASS G,H1,K,M 373 DLO (925/24)	--	--	1/4 [M6]	1.27 [32]	1.55 [39]	.62 [16]	--	.27 [7]	3.31 [84]	.31 [8]	1.06 [27]	.23 [6]	.32 [8]	19 OR 470	BLUE	W32VT (2)	W32VT (2) W32RT (2)	U32RT (2)	U32RT (2)	U32RT (2)	HYDRAULIC: Y644M (1) BAT644M (1) Y81KFT (2) PAT81KFT (2) PAT444(1)	1-5/16"
YA34L2TC14FX45	2								2.25 [57]		3.25 [83]													
YA34L2TC14FX90	3								2.43 [62]		1.98 [50]													
YA34L2TC516FX	1				5/16 [M8]		1.55 [39]	1.00 [25]	--	.33 [8]	3.75 [95]	.34 [9]			.35 [9]									
YA34L2TC516FX45	2								2.25 [57]		3.69 [94]													
YA34L2TC516FX90	3								2.43 [62]		2.42 [61]													
YA34L2NT38FX	1				3/8 [M10]		.96 [24]	1.00 [25]	--	.41 [10]	3.88 [99]	.41 [10]			.42 [11]									
YA34L2NT38FX45	2								2.25 [57]		3.81 [97]													
YA34L2NT38FX90	3								2.43 [62]		2.54 [65]													
YA34L2TC38FX	1				3/8 [M10]		1.55 [39]	1.00 [25]	--	.41 [10]	3.88 [99]	.41 [10]			.42 [11]									
YA34L2TC38FX45	2								2.25 [57]		3.81 [97]													
YA34L2TC38FX90	3								2.43 [62]		2.54 [65]													
YA34L2NTC38FX	1				3/8 [M10]		1.55 [39]	1.75 [44]	--	.41 [10]	4.63 [118]	.41 [10]			.42 [11]									
YA34L2NTC38FX45	2								2.25 [57]		4.56 [116]													
YA34L2NTC38FX90	3								2.43 [62]		3.29 [84]													
YA34L2TC12FX	1				1/2 [M12]		1.55 [39]	1.25 [32]	--	.53 [13]	4.38 [111]	.53 [13]			.55 [14]									
YA34L2TC12FX45	2								2.25 [57]		4.31 [109]													
YA34L2TC12FX90	3								2.43 [62]		3.04 [77]													
YA34L2NTCFX	1	350 kcmil Flex CLASS G,H1,K,M 373 DLO (925/24)	--	--	1/2 [M12]	1.27 [32]	1.55 [39]	1.75 [44]	--	.56 [14]	5.06 [129]	.63 [16]	1.06 [27]	.23 [6]	.64 [16]	19 OR 470	BLUE	W32VT (2)	W32VT (2) W32RT (2)	U32RT (2)	U32RT (2)	U32RT (2)		1-5/16"
YA34L2NTCFX45	2								2.25 [57]		5.00 [127]													
YA34L2NTCFX90	3								2.43 [62]		3.73 [95]													

SEE SHEET 1 OF 19 FOR NOTES

TO ORDER BURNDY® PRODUCTS CALL

UNITED STATES
1-800-346-4175 (LONDONDERRY, NH)

CANADA:
1-800-361-6975 (QUEBEC)
1-800-387-6487 (ALL OTHER PROVINCES)

FOR PRODUCT INFO: http://www.burndy.com

HYLUG ™

ITEM NO:	N/A	
CAT. NO:	YA34L-2-TC-FX- (SEE TABLE)	
DRAWN BY:	D.FILLION	12/07/92
CHECKER:	K.HENRY	12/10/92
DSN APPVL:	C.PALAGI	12/14/92
MFG APPVL:	N/A	--
QA APPVL:	A.LLOYD	12/14/92
MKT APPVL:	T.NELSON	12/14/92
PROD FAM:	--	
PROJECT #:	--	
DOCUMENT TYPE:	Sales	
REL LEVEL:	In Work	

BURNDY

SCALE: NTS

SIZE: D

DRAWING NO: SE208119

REV: V

SHEET 14 OF 19

REV: PE0200

REV	DATE	DESCRIPTION	ECO	BY	CHK.
V	2018-08-10 11:05:00 EDT	UPDATE AS PER MARKUP	49615	RB	VS

CATALOG NO.	FIG. NO.	CONDUCTOR			BOLT SIZE	DIMENSIONS										BURNDY INSTALLATION TOOLING (# CRIMPS)						
		FLEX	CODE (AWG)	NAVY 5		B	C	E	H	K	L	N	O.D.	T REF.	Z MIN.	DIE INDEX	COLOR CODE	HYDRAULIC Y750 Y35 Y39	HYDRAULIC Y46 4	HYDRAULIC Y45 3	DIELESS (# CRIMPS)	WIRE STRIP LENGTH
YA36L2TC38FX	1	500 kcmil Flex CLASS G,H 444 DLO (1100/24)	--	--	3/8	1.38 [35]	1.74 [44]	1.00 [25]	--	.40 [10]	4.24 [108]	.50 [13]	1.19 [31]	.27 [7]	.53 [13]	20 OR 299	BROWN	U34RT (2)	U34RT (2)	U34RT (2)	HYDRAULIC: Y644M (1) PAT81KFT(1) YA81KFT(1) PAT444(1)	1-3/8"
YA36L2TC38FX45	2								2.48 [63]		4.21 [107]											
YA36L2TC38FX90	3								2.68 [68]		2.81 [71]											
YA36L2NTCFX	1	500 kcmil Flex CLASS G,H 444 DLO (1100/24)	--	--	1/2	1.38 [35]	1.74 [44]	1.75 [44]	--	.56 [14]	5.24 [133]	.63 [16]	1.19 [31]	.27 [7]	.65 [17]	20 OR 299	BROWN	U34RT (2)	U34RT (2)	U34RT (2)		1-3/8"
YA36L2NTCFX45	2								2.48 [63]		5.21 [132]											
YA36L2NTCFX90	3								2.68 [68]		3.81 [97]											
YA36L2TC78E188FX	1				7/8			1.88 [48]	--	.94 [24]	5.86 [149]	.88 [23]			.89 [23]							

SEE SHEET 1 OF 19 FOR NOTES

TO ORDER BURNDY® PRODUCTS CALL

UNITED STATES
1-800-346-4175 (LONDONDERRY, NH)

CANADA:
1-800-361-6975 (QUEBEC)
1-800-387-6487 (ALL OTHER PROVINCES)

FOR PRODUCT INFO: http://www.burndy.com

HYLUG ™

ITEM NO:	N/A	
CAT. NO:	YA36L-2TC-FX- (SEE TABLE)	
DRAWN BY:	D.FILLION	12/07/92
CHECKER:	K.HENRY	12/10/92
DSN APPVL:	C.PALAGI	12/14/92
MFG APPVL:	N/A	--
QA APPVL:	A.LLOYD	12/14/92
MKT APPVL:	T.NELSON	12/14/92
PROD FAM:	--	
PROJECT #:	--	
DOCUMENT TYPE:	Sales	
REL LEVEL:	In Work	

BURNDY

SCALE: NTS

SIZE	DRAWING NO	REV
D	SE208119	V
	SHEET 15 OF 19	

REV: PE0200

DRAWING NO. SE208119

REV	DATE	DESCRIPTION	ECO	BY	C'H'K.
V	2018-08-10 11:05:00 EDT	UPDATE AS PER MARKUP	49615	RB	VS

CATALOG NO.	FIG. NO.	CONDUCTOR FLEX	CONDUCTOR CODE (AWG)	CONDUCTOR NAVY (5)	BOLT SIZE	DIMENSIONS B	C	E	H	K	L	N	O.D.	T REF.	Z MIN.	BURNDY INSTALLATION TOOLING (# CRIMPS) DIE INDEX	COLOR CODE	HYDRAULIC Y750 Y35 Y39	HYDRAULIC Y46 PAT46 (4)	HYDRAULIC Y45 (3)	DIELESS (# CRIMPS)	WIRE STRIP LENGTH
YA38L2TC516FX	1	500 kcmil Flex CLASS H,I,K 550 kcmil CLASS G,H,I 535 DLO (1350/24)	--	--	5/16 [M8]	1.45 [37]	1.84 [47]	1.00 [25]	--	.33 [8]	4.04 [103]	.34 [9]	1.25 [32]	.27 [7]	.36 [9]	L99	PINK	U38XRT UR4140WE (2)	U38XRT UR4140WE (2)	U38XRT UR4140WE (2)	HYDRAULIC: Y644- SERIES(1) PAT644- SERIES (1) Y81KFT- SERIES (1) PAT81KFT- SERIES (1) Y4PC834- SERIES (1) PAT4PC834- SERIES (1) PAT444(1)	1-7/16"
YA38L2TC516FX45	2								2.60 [66]		3.98 [101]											
YA38L2TC516FX90	3								2.80 [71]		2.53 [64]											
YA38L2NT38FX	1				3/8 [M10]		1.63 [41]	1.00 [25]	--	.40 [10]	4.35 [111]	.50 [13]			.53 [13]							
YA38L2NT38FX45	2								2.60 [66]		4.30 [109]											
YA38L2NT38FX90	3								2.80 [71]		2.84 [72]											
YA38L2NT38FXG2	1						1.35 [34]		--		4.26 [108]											
YA38L2TC38FX	1				3/8 [M10]		1.84 [47]	1.00 [25]	--	.40 [10]	4.35 [111]	.50 [13]			.53 [13]							
YA38L2TC38E10FX	1							1.25 [32]	--		4.60 [117]											
YA38L2TC38FX45	2							1.00 [25]	2.60 [66]		4.30 [109]											
YA38L2TC38FX90	3								2.80 [71]		2.84 [72]											
YA38L2TC12FX	1				1/2 [M12]		1.84 [47]	1.25 [32]	--	.53 [13]	4.67 [119]	.53 [13]			.56 [14]							
YA38L2TC12FX45	2								2.60 [66]		4.61 [117]											
YA38L2TC12FX90	3								2.80 [71]		3.16 [80]											
YA38L2NTCFX	1				1/2 [M12]		1.84 [47]	1.75 [44]	--	.56 [14]	5.35 [136]	.63 [16]			.65 [17]							
YA38L2NTCFX45	2								2.60 [66]		5.30 [134]											
YA38L2NTCFX90	3								2.80 [71]		3.84 [98]											
YA38L2NNTFX	1	500 kcmil Flex CLASS H,I,K 550 kcmil CLASS G,H,I 535 DLO (1350/24)	--	--	1/2 [M12]	1.45 [37]	1.63 [41]	1.75 [44]	--	.56 [14]	5.35 [136]	.63 [16]	1.25 [32]	.27 [7]	.65 [17]	L99	PINK	U38XRT UR4140WE (2)	U38XRT UR4140WE (2)	U38XRT UR4140WE (2)		1-7/16"
YA38L2NNTFX45	2								2.60 [66]		5.30 [134]											
YA38L2NNTFX90	3								2.80 [71]		3.84 [98]											

SEE SHEET 1 OF 19 FOR NOTES

TO ORDER BURNDY® PRODUCTS CALL

UNITED STATES
1-800-346-4175 (LONDONDERRY, NH)

CANADA:
1-800-361-6975 (QUEBEC)
1-800-387-6487 (ALL OTHER PROVINCES)

FOR PRODUCT INFO: http://www.burndy.com

HYLUG™

ITEM NO:	N/A	
CAT. NO:	YA38L-2TC-FX- (SEE TABLE)	
DRAWN BY:	D.FILLION	12/08/92
CHECKER:	K.HENRY	12/10/92
DSN APPVL:	C.PALAGI	12/14/92
MFG APPVL:	N/A	--
QA APPVL:	A.LLOYD	12/14/92
MKT APPVL:	T.NELSON	12/14/92
PROD FAM:	--	
PROJECT #:	--	
DOCUMENT TYPE:	Sales	
REL LEVEL:	In Work	

BURNDY

SCALE: NTS

SIZE: D

DRAWING NO: SE208119

REV: V

SHEET 16 OF 19

REV: PE0200

REV	DATE	DESCRIPTION	ECO	BY	CHK.
V	2018-08-10 11:05:00 EDT	UPDATE AS PER MARKUP	49615	RB	VS

CATALOG NO.	FIG. NO.	CONDUCTOR			BOLT SIZE	DIMENSIONS										INSTALLATION TOOLING (# CRIMPS)						
		FLEX	CODE (AWG)	NAVY △5		B	C	E	H	K	L	N	O.D.	T REF.	Z MIN.	DIE INDEX	COLOR CODE	HYDRAULIC PAT750 Y750 Y35 Y39	HYDRAULIC Y46 △4	HYDRAULIC Y45 △3	DIELESS (# CRIMPS)	WIRE STRIP LENGTH
YA39L2TC38E10FX	1	600 kcmil Flex CLASS G,H,I,K	--	--	3/8 [M10]	1.42 [36]	1.91 [49]	1.25 [32]	--	.41 [10]	4.61 [117]	.50 [13]	1.30 [33]	.27 [7]	.51 [13]	400	PINK	U38RT (2)	U38RT (2)	U38RT (2)	HYDRAULIC: Y644M (1) PAT81KFT(2) YA81KFT(2) PAT444(1)	1-1/2"
YA39L2NTCFX	1				1/2 [M12]			1.75 [44]	--	.56 [14]	5.36 [136]	.63 [16]			.65 [17]							
YA39L2NTCFX45	2								2.65 [65]		5.31 [135]											
YA39L2NTCFX90	3								2.81 [71]		3.87 [98]											

SEE SHEET 1 OF 19 FOR NOTES

TO ORDER BURNDY® PRODUCTS CALL

UNITED STATES
1-800-346-4175 (LONDONDERRY, NH)

CANADA:
1-800-361-6975 (QUEBEC)
1-800-387-6487 (ALL OTHER PROVINCES)

FOR PRODUCT INFO: http://www.burndy.com

HYLUG™

ITEM NO:	N/A	
CAT. NO:	YA39L-2NTC-FX- (SEE TABLE)	
DRAWN BY:	D.FILLION	12/08/92
CHECKER:	K.HENRY	12/10/92
DSN APPVL:	C.PALAGI	12/14/92
MFG APPVL:	N/A	--
QA APPVL:	A.LLOYD	12/14/92
MKT APPVL:	T.NELSON	12/14/92
PROD FAM:	--	
PROJECT #:	--	
DOCUMENT TYPE:	Sales	
REL LEVEL:	In Work	

BURNDY

SCALE: NTS

SIZE: D

DRAWING NO: SE208119

REV: V

SHEET 17 OF 19

REV: PE0200

DRAWING NO. SE208119

REV	DATE	DESCRIPTION	ECO	BY	C'H'K.
V	2018-08-10 11:05:00 EDT	UPDATE AS PER MARKUP	49615	RB	VS

CATALOG NO.	FIG. NO.	CONDUCTOR			BOLT SIZE	DIMENSIONS										INSTALLATION TOOLING (# CRIMPS)						
		FLEX	CODE (AWG)	NAVY 5		B	C	E	H	K	L	N	O.D.	T REF.	Z MIN.	DIE INDEX	COLOR CODE	HYDRAULIC Y750 Y35 Y39	HYDRAULIC Y46 4	HYDRAULIC Y45 3	DIELESS (# CRIMPS)	WIRE STRIP LENGTH
YA40L2TC38FX	1	650 kcmil Flex CLASS G	--	--	3/8	1.42 [36]	1.98 [50]	1.00 [25]	--	.41 [10]	4.38 [111]	.50 [13]	1.35 [34]	.30 [8]	.52 [13]	24	BLACK	U39RT (2)	U39RT (2)	U39RT (2)	HYDRAULIC: Y644M (1) PAT81KFT(2) YA81KFT(2) PAT444(1)	1-5/16"
YA40L2TC38FX45	2	646 DLO (1600/24)							2.71 [69]		4.38 [111]											
YA40L2TC38FX90	3								2.89 [73]		2.91 [74]											
YA40L2NNTFX	1				1/2		1.63 [41]	1.75 [44]	--	.56 [14]	5.38 [137]	.63 [16]			.65 [17]							
YA40L2NNTFX45	2								2.71 [69]		5.38 [137]											
YA40L2NNTFX90	3								2.89 [73]		3.91 [99]											
YA40L2NTCFX	1	650 kcmil Flex CLASS G			1/2		1.98 [50]	1.75 [44]	--	.56 [14]	5.38 [137]	.63 [16]			.65 [17]							
YA40L2NTCFX45	2								2.71 [69]		5.38 [137]											
YA40L2NTCFX90	3	646 DLO (1600/24)	--	--		1.42 [36]			2.89 [73]		3.91 [99]		1.35 [34]	.30 [8]		24	BLACK	U39RT (2)	U39RT (2)	U39RT (2)		1-5/16"

SEE SHEET 1 OF 19 FOR NOTES

TO ORDER BURNDY® PRODUCTS CALL

UNITED STATES
1-800-346-4175 (LONDONDERRY, NH)

CANADA:
1-800-361-6975 (QUEBEC)
1-800-387-6487 (ALL OTHER PROVINCES)

FOR PRODUCT INFO: http://www.burndy.com

HYLUG™

ITEM NO:	N/A	
CAT. NO:	YA40L-2-T-FX- (SEE TABLE)	
DRAWN BY:	D.FILLION	12/08/92
CHECKER:	K.HENRY	12/10/92
DSN APPVL:	C.PALAGI	12/14/92
MFG APPVL:	N/A	--
QA APPVL:	A.LLOYD	12/14/92
MKT APPVL:	T.NELSON	12/14/92
PROD FAM:	--	
PROJECT #:	--	
DOCUMENT TYPE:	Sales	
REL LEVEL:	In Work	

BURNDY

SCALE: NTS

SIZE	DRAWING NO	REV
D	SE208119	V
	SHEET 18 OF 19	

REV: PE0200

DRAWING NO. SE208119

REV	DATE	DESCRIPTION	ECO	BY	C'H'K.
V	2018-08-10 11:05:00 EDT	UPDATE AS PER MARKUP	49615	RB	VS

CATALOG NO.	FIG. NO.	CONDUCTOR FLEX	CONDUCTOR CODE (AWG)	CONDUCTOR NAVY 5	BOLT SIZE	B	C	E	H	K	L	N	O.D.	T REF.	Z MIN.	DIE INDEX	COLOR CODE	HYDRAULIC Y750 Y35 Y39	HYDRAULIC Y46 4	HYDRAULIC Y45 3	DIELESS (# CRIMPS)	WIRE STRIP LENGTH
YA44L2TC38FX	1	750 kcmil Flex CLASS G,H,I 777 DLO (1925/24)	--	--	3/8	1.65 [42]	2.19 [56]	1.00 [25]	--	.40 [10]	4.74 [120]	.50 [13]	1.50 [38]	.33 [8]	.53 [13]	L115	YELLOW	U44XRT (2)	U44XRT (2)	U44XRT (2)	HYDRAULIC: Y644M (1) PAT81KFT(2) YA81KFT(2) PAT444(1)	1-5/8"
YA44L2TC38FX45	2								3.07 [78]		4.71 [120]											
YA44L2TC38FX90	3								3.29 [84]		3.02 [77]											
YA44L2TC12FX	1				1/2			1.25 [32]	--	.53 [13]	5.05 [128]	.53 [13]			.56 [14]							
YA44L2TC12FX45	2								3.07 [78]		5.02 [128]											
YA44L2TC12FX90	3								3.29 [84]		3.33 [85]											
YA44L2TC12E3FX	1				1/2			1.50 [38]	--	.53 [13]	5.30 [135]	.53 [13]			.56 [14]							
YA44L2TC12E3FX45	2								3.07 [78]		5.27 [134]											
YA44L2TC12E3FX90	3								3.29 [84]		3.58 [91]											
YA44L2NTCFX	1				1/2			1.75 [44]	--	.56 [14]	5.74 [146]	.63 [16]			.65 [17]							
YA44L2NTCFX45	2								3.07 [78]		5.71 [145]											
YA44L2NTCFX90	3								3.29 [84]		4.02 [102]											
YA44L2TC58FX	1				5/8		2.19 [56]	1.50 [38]	--	.69 [17]	5.55 [141]	.66 [17]			.68 [17]							
YA44L2TC58FX45	2								3.07 [78]		5.52 [140]											
YA44L2TC58FX90	3								3.29 [84]		3.83 [97]											
YA44L2NT38FX	1				3/8		1.63 [41]	1.00 [25]	--	.40 [10]	4.74 [120]	.50 [13]			.53 [13]							
YA44L2NT38FX45	2								3.07 [78]		4.71 [120]											
YA44L2NT38FX90	3								3.29 [84]		3.02 [77]											
YA44L2NNTFX	1	750 kcmil Flex CLASS G,H,I 777 DLO (1925/24)	--	--	1/2	1.65 [42]	1.63 [41]	1.75 [44]	--	.56 [14]	5.74 [146]	.63 [16]	1.50 [38]	.33 [8]	.65 [17]	L115	YELLOW	U44XRT UR4141WE (2)	U44XRT UR4141WE (2)	U44XRT UR4141WE (2)		1-5/8"
YA44L2NNTFX45	2								3.07 [78]		5.71 [145]											
YA44L2NNTFX90	3								3.29 [84]		4.02 [102]											

INSTALLATION TOOLING (# CRIMPS)

SEE SHEET 1 OF 19 FOR NOTES

TO ORDER BURNDY® PRODUCTS CALL

UNITED STATES
1-800-346-4175 (LONDONDERRY, NH)

CANADA:
1-800-361-6975 (QUEBEC)
1-800-387-6487 (ALL OTHER PROVINCES)

FOR PRODUCT INFO: http://www.burndy.com

HYLUG™

ITEM NO:	N/A
CAT. NO:	YA44L-2TC-FX- (SEE TABLE)
DRAWN BY:	D.FILLION 12/08/92
CHECKER:	K.HENRY 12/10/92
DSN APPVL:	C.PALAGI 12/14/92
MFG APPVL:	N/A --
QA APPVL:	A.LLOYD 12/14/92
MKT APPVL:	T.NELSON 12/14/92
PROD FAM:	--
PROJECT #:	--
DOCUMENT TYPE:	Sales
REL LEVEL:	In Work
SIZE	D
DRAWING NO	SE208119
REV	V
SCALE:	NTS
SHEET	19 OF 19

BURNDY

REV: PE0200