M-3343

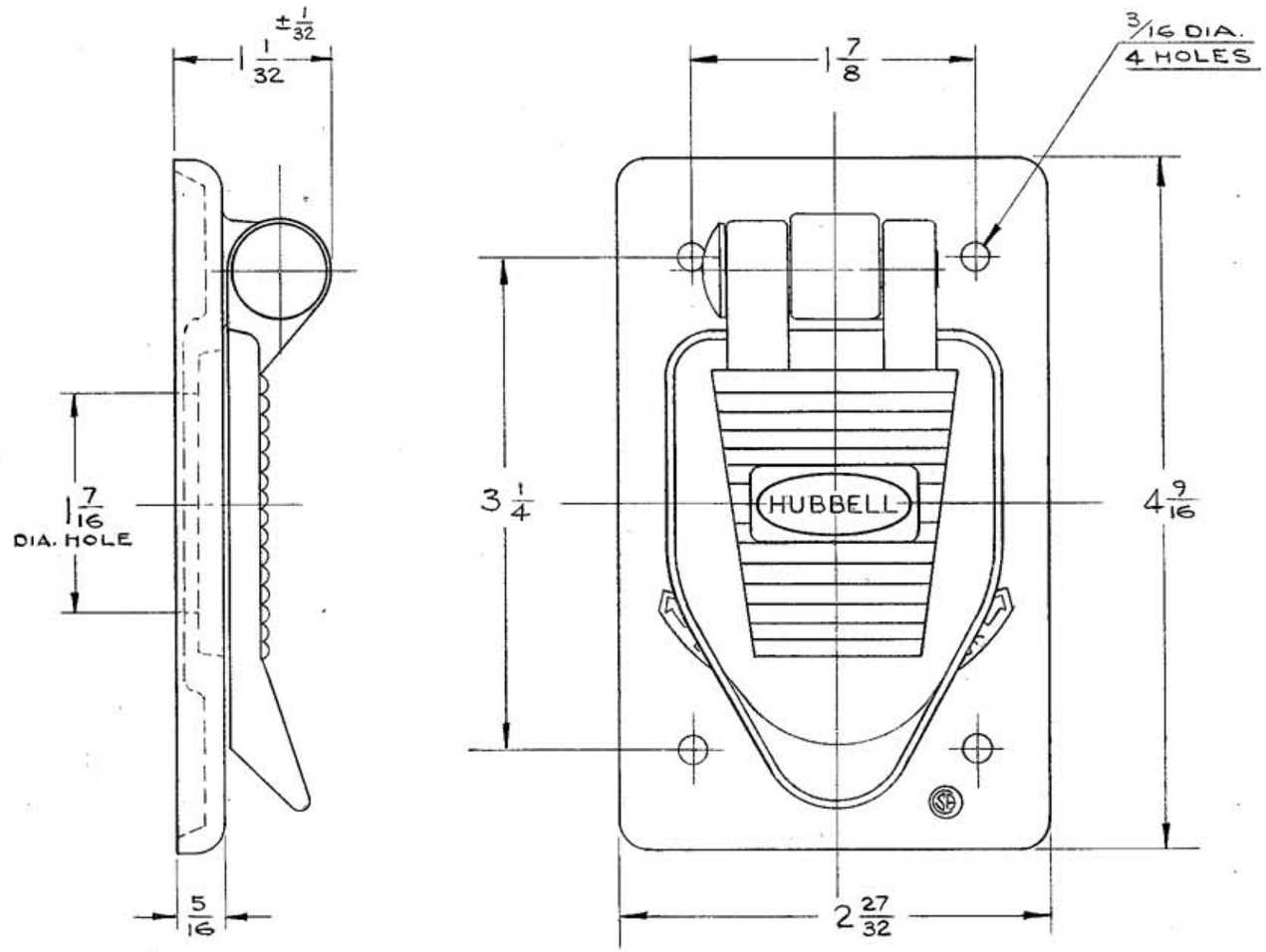

LIST OF PARTS

DESCRIPTION	MATERIAL	FINISH
OUTLET BOX COVER	ALUMINUM	LACQUER
FLAP	ALUMINUM	LACQUER
COIL SPRING	.045 DIA. STAIN. STEEL	
RIVET	ALUMINUM	ANODIZE
GASKET	NEOPRENE	GRAY

SYM	REVISIONS	APP	DATE

SUPERSEDES DWG. DATED 3-31-58

TITLE CAST ALUMINUM PLATE WITH LIFT COVER FITS "FS" & "FD" BOXES.

TOLERANCES UNLESS OTHERWISE SPECIFIED
FRACTIONS ± 1/64
DECIMALS ± .005
ANGLES ± 2°

HARVEY HUBBELL, INC.
BRIDGEPORT, CONN.

DR. BY ASM	APP. BY
TR. BY	SCALE FULL
CHK'D. BY JCH	DATE 6-23-69

DIMENSION SHEET FOR CAT. NO. 23007

REPAIRABLE ☐ NON-REPAIRABLE ☒

B M-3343

CODE 74545