SCREW: E0945	MATERIAL: ALUMINUM	REV: R		ILSCO connections matter
CAT. NO.: AU-800-2NS	PLATING: EL-TIN	DRAWN BY: CLH	SCALE: 1:1	800-776-9775 www.ilsco.com
INFORMATION SHEET: FORM 1	MARKING: ILSCO, D2059, AU-800-2NS, 300-800MCM, AL9CU, UL	DATE: 1/15/2008	SIZE: A	DWG. NO. D2059
				SHEET: 1 OF 1

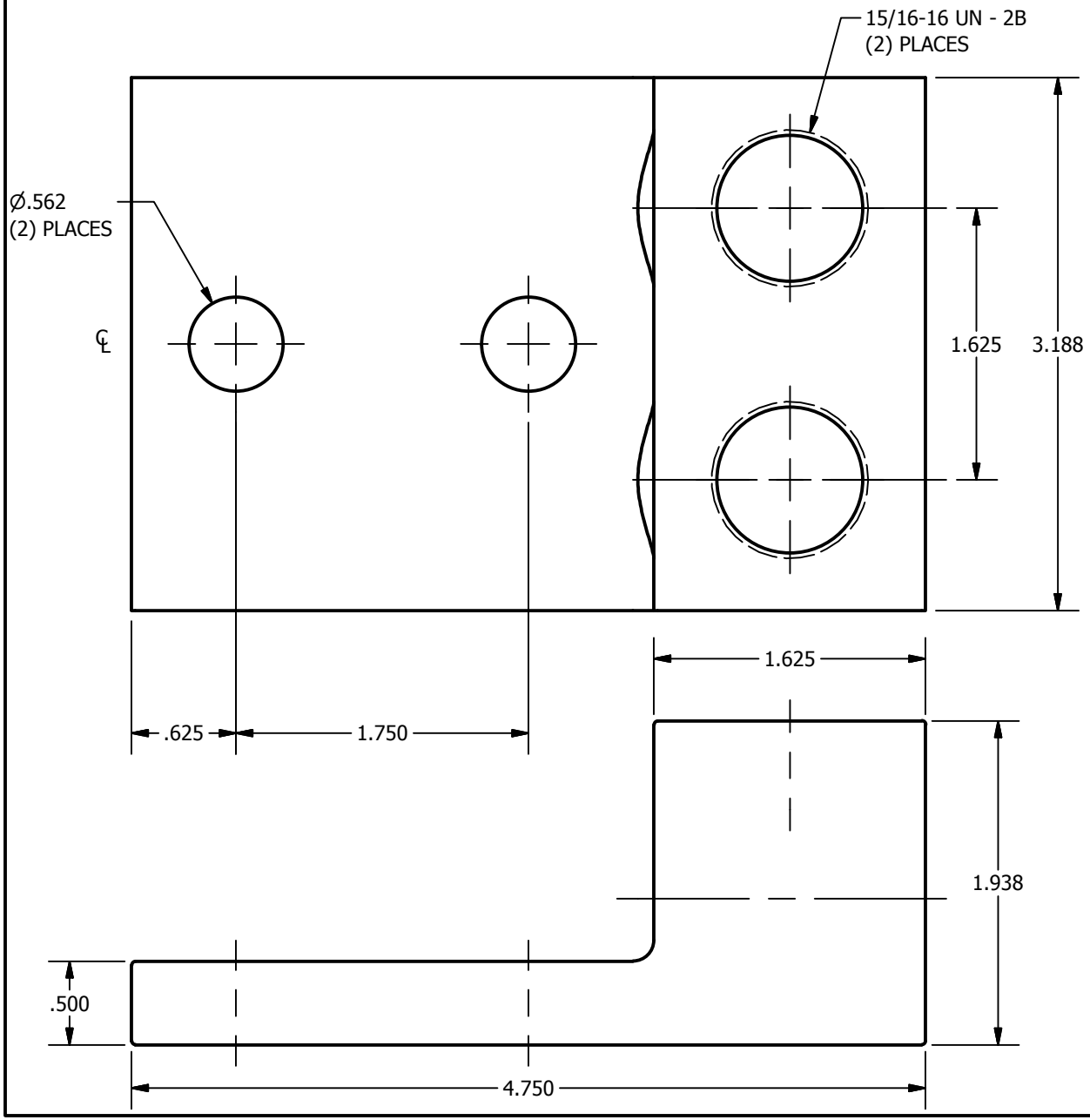

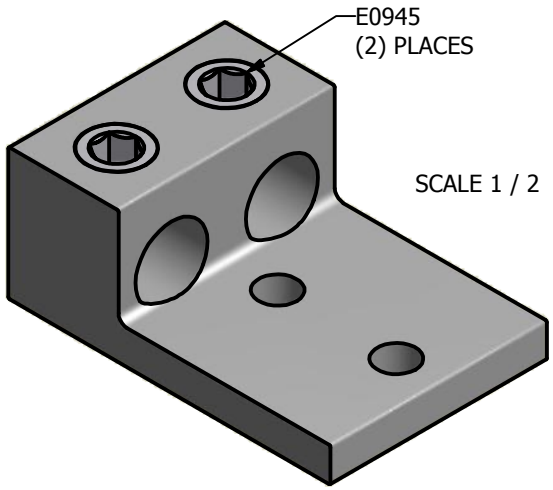

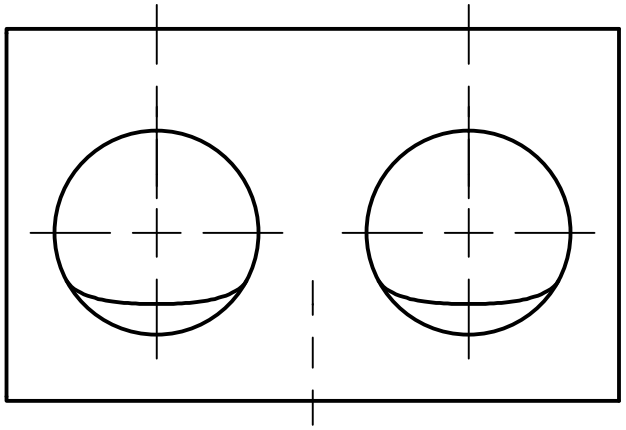

THE INFORMATION CONTAINED WITHIN THIS DOCUMENT IS PROPRIETARY TO ILSCO AND MAY NOT BE DISCLOSED WITHOUT PRIOR WRITTEN CONSENT