www.sylvania.com/luminaires

© 2018 LEDVANCE LLC Licensee of product trademark SYLVANIA in general lighting

See our newly expanded Luminaires Portfolio!

SYLVANIA LED Luminaires and retrofit kits are the ideal solution to fit your everyday application needs. Experience for yourself the cutting-edge, easy-to-install, energy efficient products with the features, functions and accessories you demand. And now you have more to choose from than ever before.

Visit www.sylvania.com/luminaires

SYLVANIA

TABLE OF CONTENTS

SYLVANIA Luminaires Edge-Lit Panel……1

SYLVANIA Luminaires UltraLED Edge-Lit Panels……5

SYLVANIA Luminaires ValueLED Panel……11

SYLVANIA Luminaires Volumetric Troffer……15

SYLVANIA Luminaires ValueLED Volumetric Troffer……18

SYLVANIA Luminaires UltraLED Volumetric Troffer……22

SYLVANIA Luminaires ValueLED Lumen Selectable Volumetric Troffer……28

SYLVANIA Luminaires UltraLED Retrofit Door Kit……33

SYLVANIA Luminaires ValueLED Lumen Selectable Retrofit Door Kit……40

SYLVANIA Luminaires Troffer Retrofit Kit……44

SYLVANIA Luminaires High Bay……47

SYLVANIA Luminaires ValueLED UFO High Bay……50

SYLVANIA Luminaires UltraLED Linear High Bay……57

SYLVANIA Luminaires UltraLED Strip……65

SYLVANIA Luminaires ValueLED Strip Retrofit……68

SYLVANIA Luminaires UltraLED Wrap……72

SYLVANIA Luminaires 10” Canopy……75

SYLVANIA Luminaires Canopy……78

SYLVANIA Luminaires Garage……82

SYLVANIA Luminaires ValueLED Garage Luminaire……85

SYLVANIA Luminaires Vapor Tight……89

SLYVANIA Luminaires Slim Wall Pack……95

SLYVANIA Luminaires Wall Pack Cutoff……98

SYLVANIA Luminaires ValueLED Non-Cutoff Wall Pack……102

SYLVANIA Luminaires Wall Pack Non-Cutoff……106

SYLVANIA Luminaires Small Wall Pack……110

SYLVANIA Luminaires Area Light……113

SYLVANIA Luminaires ValueLED Area Light……124

SYLVANIA Luminaires Dusk to Dawn……134

SYLVANIA Luminaires Slim Floodlight……137

SLYVANIA Luminaires ValueLED Slim Floodlight……144

SYLVANIA Luminaires Bulkhead……148

SYLVANIA Luminaires Jelly Jar……151

SYLVANIA Luminaires Square Light……154

SYLVANIA Luminaires Bullet Floodlight……157

SYLVANIA Luminaires Bollard……160

ULTRA LED RT5/6 HO Recessed Downlight Kit……163

SYLVANIA Luminaire ValueLED Contractor Series RT Screw-based Smooth Reflector……167

SYLVANIA Luminaire High-PreformanceLED RT Screw-based Smooth and Baffle Reflector……171

ULTRA LED RT8 Recessed Downlight Kit……177

SYLVANIA Luminaires UltraLED RT Recessed Downlight……183

SYLVANIA Luminaires UltraLED Selectable Downlights……190

SYLVANIA Luminaires High-PreformanceLED Recessed Downlight Kit……198

SYLVANIA Luminaires UltraLED MICRODISK……204

SYLVANIA Luminaires ValueLED Selectable Slim MICRODISK……209

SYLVANIA Luminaires UltraLED 8-10” Quad Downlight……214

SLYVANIA Luminaires Slim Downlight……218

SYLVANIA LEDVANCE Luminaires Surface Mount……221

SYLVANIA Luminaires ValueLED Exit Signs……224

SYLVANIA Luminaires ValueLED Emergency Lights……227

SYLVANIA Luminaires Shop Light……230

SYLVANIA Luminaires ValueLED Strip……234

SYLVANIA Luminaires ValueLED Wrap Luminaire with Motion Sensor……238

SYLVANIA Luminaire ValueLED Wide Selectable Wrap……241

SYLVANIA Luminaire ValueLED WRAPLIGHT……245

SYLVANIA Vintage Sconce Family……248

SYLVANIA Vintage Semi-Flush Mount Family……250

SLYVANIA Vintage Flush Mount Family…….252

SYLVANIA Luminaires LED Round Flush Mount…….254

SYLVANIA Luminaires Surface Mount Series…….256

SYLVANIA Vintage Pendant Family…….258

SYLVANIA Luminaires Slim Convertible LED Undercabinet Light…….260

SYLVANIA Luminaires Shop Light…….262

SYLVANIA Luminaires Hook Light…….264

SYLVANIA Luminaires Remote…….266

SYLVANIA Luminaires Vapor Tight Accessories…….268

SYLVANIA Luminaires Wall Pack Accessories…….270

SYLVANIA Luminaires

Edge-Lit Panel

Catalog #	Type
Project	
Notes	
Date	
Prepared by	

Dimensions

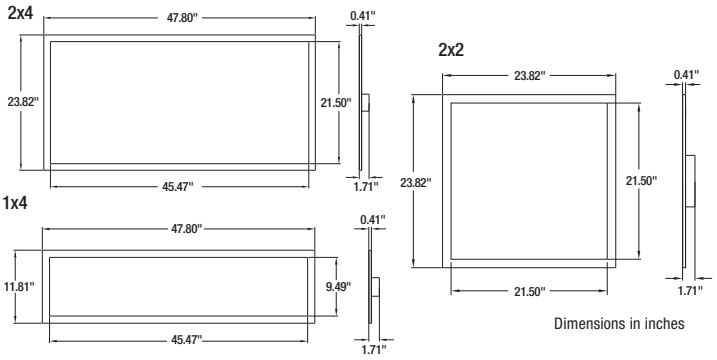

Product Features

The Edge-Lit Panels are environmentally preferable LED alternatives to traditional fluorescent luminaires, offering up to 47% in energy savings. Ideal in place of traditional luminaires, or as new installations, the Edge-Lit Panels are offered in three sizes for illuminating offices, retail or hospitality areas.

The slim design of these luminaires is beneficial for installation in tight ceilings spaces and they offer low glare and uniform illumination. SYLVANIA luminaires assure optimum light engine performance for extended service and rated life (≥50,000 hours L_{70}).

Wattage Comparison Chart

Edge-Lit Panel Size	Traditional Source	Traditional System Wattage	LED System Wattage	Energy Savings
1x4	2x28W T8	49	32	35%
	2x32W T8	56	32	43%
2x2	3x17W T8	48	32	33%
	2U31 T8	56	32	43%
2x4	2x28W T8	49	32	35%
	2x32W T8	56	32	43%
	3x28W T8	58	40	31%
	3x32W T8	75	40	47%

Specifications

Weight: 1x4 & 2x2: 7.96lbs (3.6 kg) Standard 2x4: 14.33lbs (6.5 kg) Standard
1x4 & 2x2: 10.14lbs (4.6 kg) Emergency 2x4: 16.54lbs (7.5 kg) Emergency

Construction: Extruded aluminum frame with sheet metal back plate, earthquake clips and diffused flat lens. The standard color is white.

LED System: LED system with a life rating of ≥50,000 hours at L_{70} @ 25°C. Luminaire efficacy up to 114 LPW.

Electrical: Offered in 32 and 40 Watts, the luminaire is designed to operate through the 120-277 VAC universal voltage range. The LED driver has a 0.5kV inherent surge suppression and is a constant current device. The power factor is ≥90% and THD is ≤20%.

Dimming: The driver is 0-10V dimmable (down to 10%). Please reference the dimmer compatibility document (LEDLUM012).

Color Characteristics: CRI>80; CCT of 3500K, 4000K or 5000K.

Optics: White flat edge-lit PMMA diffuser lens.

Options Available: Emergency Battery Backup.

Installation: Luminaire lays in standard 15/16" and 9/16" T-grid ceilings.

Operating Temperature: -4°F to +104°F (-20°C to +40°C);
EM: +32°F to +104°F (0°C to +40°C).

Listings: cETLus listed to UL1598 standards, IC and damp rated.

Note: Suitable for use in closets, compliant with NFPA 70, NEC section 410.16 (A)(3) and 410.16 (C)(5).

Warranty: Standard 5-year luminaire warranty (LEDLUM001).

Note: Specifications subject to change without notice. IES files available online.

**DLC not applicable to emergency versions

Ordering Guide

Item Number:

PANELF	1A	/	XXX	XXX	D	8	XX	/	XX	G	/	WH	/	X
Product Name	Generation		Wattage	Voltage	Dimming	CRI	Color Temp (CCT)		Dimension	Mounting		Color/Finish		Option
PANELF	1A		032 = 32 Watts	UNV = 120-277V	D = 0-10V	8≥80	35 = 3500K		14 = 1x4	G = Grid		WH = White		Blank = No Option
			040 = 40 Watts*				40 = 4000K		22 = 2x2					E = Emergency
							50 = 5000K		24 = 2x4					

*Only available in 2x4 size.

Photometric Data

Average Illuminance (FC) at 30" AFF and avg/min uniformity
80/50/20 Reflectances

			8 ft Mounting Height			10 ft Mounting Height			12 ft Mounting Height		
			On Center Fixture Spacing			On Center Fixture Spacing			On Center Fixture Spacing		
			8'x10'	10'x10'	10'x12'	8'x10'	10'x10'	10'x12'	8'x10'	10'x10'	10'x12'
1'x4'	32W	PANELF1A/032UNVD835/14G/WH	44fc / 3.2	36fc / 2.9	32fc / 2.0	43fc / 2.7	35fc / 2.4	31fc / 1.8	42fc / 2.5	34fc / 2.3	31fc / 1.8
		PANELF1A/032UNVD840/14G/WH									
2'x2'	32W	PANELF1A/032UNVD835/22G/WH	47fc / 3.2	39fc / 2.9	35fc / 2.0	46fc / 2.7	38fc / 2.4	33fc / 1.8	44fc / 2.4	37fc / 2.3	33fc / 1.8
		PANELF1A/032UNVD840/22G/WH									
2'x4'	32W	PANELF1A/032UNVD835/24G/WH	44fc / 3.3	36fc / 2.8	32fc / 2.0	43fc / 2.7	35fc / 2.4	31fc / 1.8	42fc / 2.5	34fc / 2.3	31fc / 1.7
		PANELF1A/032UNVD840/24G/WH									
	40W	PANELF1A/040UNVD835/24G/WH	62fc / 3.3	51 fc /2.8	46fc / 2.0	60fc / 2.7	50fc / 2.4	44fc / 1.8	59fc / 2.5	48fc / 2.3	43fc / 1.7
		PANELF1A/040UNVD840/24G/WH									

*Table also applicable to emergency versions.

Ordering Information

Item Number	Ordering Abbreviation	Power (W)	Input Voltage	Dimming	CRI	Color Temp (CCT)	Size	Total Fixture Lumens	LPW*	DLC**	Options	Case Qty
74243†	PANELF1A/032UNVD835/14G/WH	32	120-277V	0-10V	>80	3500K	1x4	3200	102	Std	–	5
61600	PANELF1A/032UNVD835/14G/WH	32	120-277V	0-10V	>80	3500K	1x4	3200	102	Std	–	6
74244†	PANELF1A/032UNVD840/14G/WH	32	120-277V	0-10V	>80	4000K	1x4	3300	104	Std	–	5
61601	PANELF1A/032UNVD840/14G/WH	32	120-277V	0-10V	>80	4000K	1x4	3300	104	Std	–	6
74938†	PANELF1A/032UNVD850/14G/WH	32	120-277V	0-10V	>80	5000K	1x4	3500	110	Std	–	5
61602	PANELF1A/032UNVD850/14G/WH	32	120-277V	0-10V	>80	5000K	1x4	3500	110	Std	–	6
74251†	PANELF1A/032UNVD835/22G/WH	32	120-277V	0-10V	>80	3500K	2x2	3500	110	Std	–	5
61596	PANELF1A/032UNVD835/22G/WH	32	120-277V	0-10V	>80	3500K	2x2	3500	110	Std	–	6
74252†	PANELF1A/032UNVD840/22G/WH	32	120-277V	0-10V	>80	4000K	2x2	3500	110	Std	–	5
61597	PANELF1A/032UNVD840/22G/WH	32	120-277V	0-10V	>80	4000K	2x2	3500	110	Std	–	6
74797†	PANELF1A/032UNVD850/22G/WH	32	120-277V	0-10V	>80	5000K	2x2	3500	114	Std	–	5
61598	PANELF1A/032UNVD850/22G/WH	32	120-277V	0-10V	>80	5000K	2x2	3500	114	Std	–	6
74247†	PANELF1A/032UNVD835/24G/WH	32	120-277V	0-10V	>80	3500K	2x4	3300	104	Std	–	3
61591	PANELF1A/032UNVD835/24G/WH	32	120-277V	0-10V	>80	3500K	2x4	3300	104	Std	–	4
74248†	PANELF1A/032UNVD840/24G/WH	32	120-277V	0-10V	>80	4000K	2x4	3300	104	Std	–	3
61592	PANELF1A/032UNVD840/24G/WH	32	120-277V	0-10V	>80	4000K	2x4	3300	104	Std	–	4
74935†	PANELF1A/032UNVD850/24G/WH	32	120-277V	0-10V	>80	5000K	2x4	3500	112	Std	–	3
61593	PANELF1A/032UNVD850/24G/WH	32	120-277V	0-10V	>80	5000K	2x4	3500	112	Std	–	4
74249†	PANELF1A/040UNVD835/24G/WH	40	120-277V	0-10V	>80	3500K	2x4	4200	109	Std	–	3
61594	PANELF1A/040UNVD835/24G/WH	40	120-277V	0-10V	>80	3500K	2x4	4200	109	Std	–	4
74250†	PANELF1A/040UNVD840/24G/WH	40	120-277V	0-10V	>80	4000K	2x4	4200	110	Std	–	3
61599	PANELF1A/040UNVD840/24G/WH	40	120-277V	0-10V	>80	4000K	2x4	4200	110	Std	–	4
74934†	PANELF1A/040UNVD850/24G/WH	40	120-277V	0-10V	>80	5000K	2x4	4300	113	Std	–	3
61595	PANELF1A/040UNVD850/24G/WH	40	120-277V	0-10V	>80	5000K	2x4	4300	113	Std	–	4
74245	PANELF1A/032UNVD835/14G/WH/E	32	120-277V	0-10V	>80	3500K	1x4	3200	102	–	Emergency Battery Backup	5
74246	PANELF1A/032UNVD840/14G/WH/E	32	120-277V	0-10V	>80	4000K	1x4	3300	104	–	Emergency Battery Backup	5
74939	PANELF1A/032UNVD850/14G/WH/E	32	120-277V	0-10V	>80	5000K	1x4	3500	110	–	Emergency Battery Backup	5
74253	PANELF1A/032UNVD835/22G/WH/E	32	120-277V	0-10V	>80	3500K	2x2	3500	110	–	Emergency Battery Backup	5
74254	PANELF1A/032UNVD840/22G/WH/E	32	120-277V	0-10V	>80	4000K	2x2	3500	110	–	Emergency Battery Backup	5
74798	PANELF1A/032UNVD850/22G/WH/E	32	120-277V	0-10V	>80	5000K	2x2	3500	114	–	Emergency Battery Backup	5
74239	PANELF1A/032UNVD835/24G/WH/E	32	120-277V	0-10V	>80	3500K	2x4	3300	104	–	Emergency Battery Backup	3
74240	PANELF1A/032UNVD840/24G/WH/E	32	120-277V	0-10V	>80	4000K	2x4	3300	104	–	Emergency Battery Backup	3
74937	PANELF1A/032UNVD850/24G/WH/E	32	120-277V	0-10V	>80	5000K	2x4	3500	112	–	Emergency Battery Backup	3
74241	PANELF1A/040UNVD835/24G/WH/E	40	120-277V	0-10V	>80	3500K	2x4	4200	109	–	Emergency Battery Backup	3
74242	PANELF1A/040UNVD840/24G/WH/E	40	120-277V	0-10V	>80	4000K	2x4	4200	110	–	Emergency Battery Backup	3
74936	PANELF1A/040UNVD850/24G/WH/E	40	120-277V	0-10V	>80	5000K	2x4	4300	113	–	Emergency Battery Backup	3

*LPW per LM79 report.
**Std for DLC Standard.
†Indicates that the product is discontinued with inventory.
For further information and to learn more about utility rebates, contact your local SYLVANIA sales representative.

Options Information

Emergency Battery Backup:
Activates when normal power supply to the fixture fails, providing a minimum of 650 lumens (700 nominal lumens) for at least 90 minutes.

Location of Emergency Test Switch

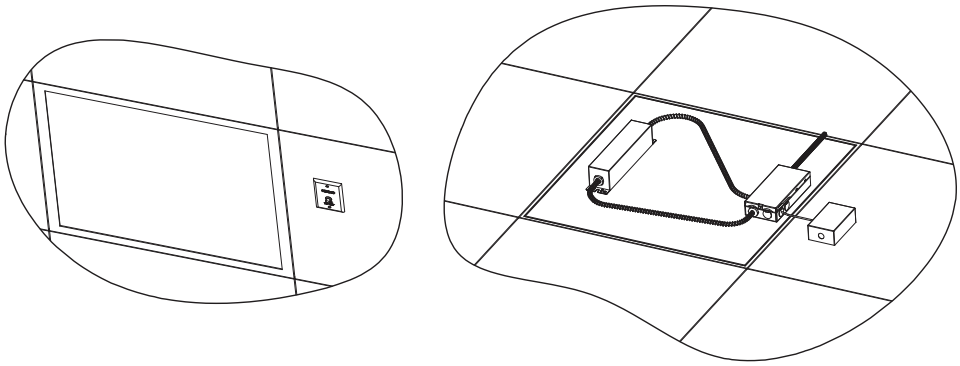

Accessories and Replacement Parts

Item Number	Ordering Abbreviation	Item Description
70132	SMKIT1A/14A/WH	1x4 Surface Mount Kit, White Finish
70380	SMKIT1A/22A/WH	2x2 Surface Mount Kit, White Finish
70381	SMKIT1A/24A/WH	2x4 Surface Mount Kit, White Finish
60457	FK1A14GWH	1x4 Flange Kit, White Finish
60458	FK1A22GWH	2x2 Flange Kit, White Finish
60459	FK1A24GWH	2x4 Flange Kit, White Finish

*Please see Surface Mount Kit installation manual for instructions (not compatible with emergency battery back-up versions).

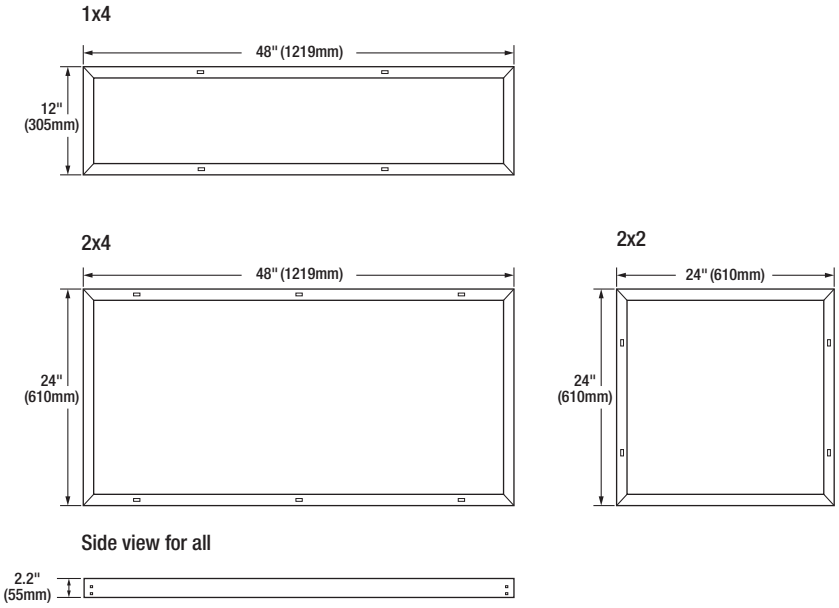

LEDVANCE LLC
200 Ballardvale Street
Wilmington, MA 01887 USA
Phone 1-800-LIGHTBULB (1-800-544-4828)
www.sylvania.com

SYLVANIA and LEDVANCE are registered trademarks.
All other trademarks are those of their respective owners.
Product Licensee of Trademark SYLVANIA in General Lighting.
Specifications subject to change without notice.

/sylvania /sylvania

© 2020 LEDVANCE LLC

SYLVANIA Luminaires

UltraLED™ Edge-Lit Panels

Item #	
Type	
Project	
Notes	
Date	

Application

Edge-Lit Panels are offered in three sizes for illuminating offices, retail or hospitality areas.

Benefits and Features

- DLC Premium listing increases rebate opportunities
- Edge-lit technology combined with diffused lens offers even and uniform lighting
- Up to 125 LPW
- 3500K, 4000K, and 5000K color temperature
- CRI >80
- Offered in 20, 26, 32, 50 watts
- Energy savings up to 64%
- Suitable for use in closets, compliant with NFPA 70, NEC section 410.16 (A)(3) and 410.16 (C)(5)

Electrical

- 120-277VAC or 120-347VAC
- LED driver is a constant current device
- Power factor ≥90%
- THD ≤20%
- 0-10V dimmable (down to 10%) (Please reference the dimmer compatibility document LEDLUM012)

Rated Life

- 50,000 hours (L_{70})

Warranty

- 5-year

Certifications and Listings

- cETLus listed to UL1598 standards
- IC and damp rated

Ambient Operating Range

- -13°F to +104°F (-25°C to +40°C)
- EM: 41°F to 104°F (5°C to 40°C)

Wattage Comparison

Panel Size	Traditional Source	Traditional System Wattage	LED System Wattage	Energy Savings
1x4	2x28W T8	49	20	59%
	2x32W T8	56	20	64%
	2x28W T8	49	26	47%
	2x32W T8	56	26	54%
2x2	3x17W T8	48	20	58%
	2xU31W T8	56	20	64%
	3x17W T8	48	26	46%
	2xU31W T8	56	26	54%
	3x17W T8	48	32	33%
	2xU31W T8	56	32	43%
2x4	2x28W T8	49	26	47%
	2x32W T8	56	26	54%
	2x28W T8	49	32	35%
	2x32W T8	56	32	43%
	3x32W T8	75	32	57%
	3x28W T8	64	40	38%
	3x32W T8	75	40	47%
	4x28W T8	97	40	59%
	4x32W T8	112	40	64%
	4x28W T8	97	50	48%
	4x32W T8	116	50	57%

*See second page for DLC listings.

Ordering Guide

PANELF	2B	/	XXX	UNV	D	8	XX	/	XX	G	/	WH	/	X
Product Name	Generation		Wattage	Voltage	Dimming	CRI	Color Temp		Dimensions	Mounting		Color/Finish		Options
PANELF =	2B		020 = 20 Watts	UNV = 120-277V	D = 0-10V	8 =>80	35 = 3500		14 = 1x4	G = Grid		WH = White		Blank = No Option
Edge-Lit			026 = 26 Watts	UNH = 120-347V	Dimming		40 = 4000		22 = 2x2					E = Emergency
Flat Panel			032 = 32 Watts				50 = 5000		24 = 2x4					Back-Up
			050 = 50 Watts											

Ordering Information

Item Number	Ordering Abbreviation	Wattage (W)	Voltage (V)	Dimming	CRI	CCT	Dimensions	Lumens	LPW	Options	DLC	MTO*	Case Qty.
60301†	PANELF2B/020UNVD835/14G/WH	20	120-277	0-10V	>80	3500K	1x4	2500	125	–	Prm		5
61645	PANELF2B/020UNVD835/14G/WH	20	120-277	0-10V	>80	3500K	1x4	2500	125	–	Prm		6
60302†	PANELF2B/020UNVD840/14G/WH	20	120-277	0-10V	>80	4000K	1x4	2500	125	–	Prm		5
61646	PANELF2B/020UNVD840/14G/WH	20	120-277	0-10V	>80	4000K	1x4	2500	125	–	Prm		6
60303†	PANELF2B/020UNVD850/14G/WH	20	120-277	0-10V	>80	5000K	1x4	2500	125	–	Prm		5
61647	PANELF2B/020UNVD850/14G/WH	20	120-277	0-10V	>80	5000K	1x4	2500	125	–	Prm		6
60307†	PANELF2B/026UNVD835/14G/WH	26	120-277	0-10V	>80	3500K	1x4	3250	125	–	Prm		5
61603	PANELF2B/026UNVD835/14G/WH	26	120-277	0-10V	>80	3500K	1x4	3250	125	–	Prm		6
60308†	PANELF2B/026UNVD840/14G/WH	26	120-277	0-10V	>80	4000K	1x4	3250	125	–	Prm		5
61604	PANELF2B/026UNVD840/14G/WH	26	120-277	0-10V	>80	4000K	1x4	3250	125	–	Prm		6
60309†	PANELF2B/026UNVD850/14G/WH	26	120-277	0-10V	>80	5000K	1x4	3250	125	–	Prm		5
61605	PANELF2B/026UNVD850/14G/WH	26	120-277	0-10V	>80	5000K	1x4	3250	125	–	Prm		6
60319†	PANELF2B/026UNVD835/24G/WH	26	120-277	0-10V	>80	3500K	2x4	3380	125	–	Prm		3
61615	PANELF2B/026UNVD835/24G/WH	26	120-277	0-10V	>80	3500K	2x4	3380	125	–	Prm		4
60320†	PANELF2B/026UNVD840/24G/WH	26	120-277	0-10V	>80	4000K	2x4	3380	125	–	Prm		3
61616	PANELF2B/026UNVD840/24G/WH	26	120-277	0-10V	>80	4000K	2x4	3380	125	–	Prm		4
60321†	PANELF2B/026UNVD850/24G/WH	26	120-277	0-10V	>80	5000K	2x4	3380	125	–	Prm		3
61617	PANELF2B/026UNVD850/24G/WH	26	120-277	0-10V	>80	5000K	2x4	3380	125	–	Prm		4
60295†	PANELF2B/032UNVD835/24G/WH	32	120-277	0-10V	>80	3500K	2x4	4160	125	–	Prm		3
61618	PANELF2B/032UNVD835/24G/WH	32	120-277	0-10V	>80	3500K	2x4	4160	125	–	Prm		4
60296†	PANELF2B/032UNVD840/24G/WH	32	120-277	0-10V	>80	4000K	2x4	4160	125	–	Prm		3
61619	PANELF2B/032UNVD840/24G/WH	32	120-277	0-10V	>80	4000K	2x4	4160	125	–	Prm		4
60297†	PANELF2B/032UNVD850/24G/WH	32	120-277	0-10V	>80	5000K	2x4	4160	125	–	Prm		3
61620	PANELF2B/032UNVD850/24G/WH	32	120-277	0-10V	>80	5000K	2x4	4160	125	–	Prm		4
60343†	PANELF2B/050UNVD835/24G/WH	50	120-277	0-10V	>80	3500K	2x4	6250	125	–	Prm		3
61621	PANELF2B/050UNVD835/24G/WH	50	120-277	0-10V	>80	3500K	2x4	6250	125	–	Prm		4
60344†	PANELF2B/050UNVD840/24G/WH	50	120-277	0-10V	>80	4000K	2x4	6250	125	–	Prm		3
61622	PANELF2B/050UNVD840/24G/WH	50	120-277	0-10V	>80	4000K	2x4	6250	125	–	Prm		4
60345†	PANELF2B/050UNVD850/24G/WH	50	120-277	0-10V	>80	5000K	2x4	6250	125	–	Prm		3
61623	PANELF2B/050UNVD850/24G/WH	50	120-277	0-10V	>80	5000K	2x4	6250	125	–	Prm		4
60349†	PANELF2B/020UNVD835/22G/WH	20	120-277	0-10V	>80	3500K	2x2	2500	125	–	Prm		5
61606	PANELF2B/020UNVD835/22G/WH	20	120-277	0-10V	>80	3500K	2x2	2500	125	–	Prm		6
60350†	PANELF2B/020UNVD840/22G/WH	20	120-277	0-10V	>80	4000K	2x2	2500	125	–	Prm		5
61607	PANELF2B/020UNVD840/22G/WH	20	120-277	0-10V	>80	4000K	2x2	2500	125	–	Prm		6
60351†	PANELF2B/020UNVD850/22G/WH	20	120-277	0-10V	>80	5000K	2x2	2500	125	–	Prm		5
61608	PANELF2B/020UNVD850/22G/WH	20	120-277	0-10V	>80	5000K	2x2	2500	125	–	Prm		6
60313†	PANELF2B/026UNVD835/22G/WH	26	120-277	0-10V	>80	3500K	2x2	3250	125	–	Prm		5
61612	PANELF2B/026UNVD835/22G/WH	26	120-277	0-10V	>80	3500K	2x2	3250	125	–	Prm		6
60314†	PANELF2B/026UNVD840/22G/WH	26	120-277	0-10V	>80	4000K	2x2	3250	125	–	Prm		5
61613	PANELF2B/026UNVD840/22G/WH	26	120-277	0-10V	>80	4000K	2x2	3250	125	–	Prm		6
60315†	PANELF2B/026UNVD850/22G/WH	26	120-277	0-10V	>80	5000K	2x2	3250	125	–	Prm		5
61614	PANELF2B/026UNVD850/22G/WH	26	120-277	0-10V	>80	5000K	2x2	3250	125	–	Prm		6
60304	PANELF2B/020UNVD835/14G/WH/E	20	120-277	0-10V	>80	3500K	1x4	2500	125	Emergency Battery Back-up	Prm	MTO	5
60305	PANELF2B/020UNVD840/14G/WH/E	20	120-277	0-10V	>80	4000K	1x4	2500	125	Emergency Battery Back-up	Prm	MTO	5
60306	PANELF2B/020UNVD850/14G/WH/E	20	120-277	0-10V	>80	5000K	1x4	2500	125	Emergency Battery Back-up	Prm	MTO	5
60310	PANELF2B/026UNVD835/14G/WH/E	26	120-277	0-10V	>80	3500K	1x4	3250	125	Emergency Battery Back-up	Prm	MTO	5
60311	PANELF2B/026UNVD840/14G/WH/E	26	120-277	0-10V	>80	4000K	1x4	3250	125	Emergency Battery Back-up	Prm	MTO	5
60312	PANELF2B/026UNVD850/14G/WH/E	26	120-277	0-10V	>80	5000K	1x4	3250	125	Emergency Battery Back-up	Prm	MTO	5
60322	PANELF2B/026UNVD835/24G/WH/E	26	120-277	0-10V	>80	3500K	2x4	3380	125	Emergency Battery Back-up	Prm	MTO	3
60323	PANELF2B/026UNVD840/24G/WH/E	26	120-277	0-10V	>80	4000K	2x4	3380	125	Emergency Battery Back-up	Prm	MTO	3
60324	PANELF2B/026UNVD850/24G/WH/E	26	120-277	0-10V	>80	5000K	2x4	3380	125	Emergency Battery Back-up	Prm	MTO	3
60298	PANELF2B/032UNVD835/24G/WH/E	32	120-277	0-10V	>80	3500K	2x4	4160	125	Emergency Battery Back-up	Prm	MTO	3
60299	PANELF2B/032UNVD840/24G/WH/E	32	120-277	0-10V	>80	4000K	2x4	4160	125	Emergency Battery Back-up	Prm	MTO	3
60300	PANELF2B/032UNVD850/24G/WH/E	32	120-277	0-10V	>80	5000K	2x4	4160	125	Emergency Battery Back-up	Prm	MTO	3
60346	PANELF2B/050UNVD835/24G/WH/E	50	120-277	0-10V	>80	3500K	2x4	6250	125	Emergency Battery Back-up	Prm	MTO	3
60347	PANELF2B/050UNVD840/24G/WH/E	50	120-277	0-10V	>80	4000K	2x4	6250	125	Emergency Battery Back-up	Prm	MTO	3
60348	PANELF2B/050UNVD850/24G/WH/E	50	120-277	0-10V	>80	5000K	24x	6250	125	Emergency Battery Back-up	Prm	MTO	3
60352	PANELF2B/020UNVD835/22G/WH/E	20	120-277	0-10V	>80	3500K	2x2	2500	125	Emergency Battery Back-up	Prm	MTO	5
60353	PANELF2B/020UNVD840/22G/WH/E	20	120-277	0-10V	>80	4000K	2x2	2500	125	Emergency Battery Back-up	Prm	MTO	5
60354	PANELF2B/020UNVD850/22G/WH/E	20	120-277	0-10V	>80	5000K	2x2	2500	125	Emergency Battery Back-up	Prm	MTO	5
60316	PANELF2B/026UNVD835/22G/WH/E	26	120-277	0-10V	>80	3500K	2x2	3250	125	Emergency Battery Back-up	Prm	MTO	5
60317	PANELF2B/026UNVD840/22G/WH/E	26	120-277	0-10V	>80	4000K	2x2	3250	125	Emergency Battery Back-up	Prm	MTO	5
60318	PANELF2B/026UNVD850/22G/WH/E	26	120-277	0-10V	>80	5000K	2x2	3250	125	Emergency Battery Back-up	Prm	MTO	5
60274†	PANELF2B/020UNHD835/14G/WH	20	120-347	0-10V	>80	3500K	1x4	2500	125	–	–		5
61624	PANELF2B/020UNHD835/14G/WH	20	120-347	0-10V	>80	3500K	1x4	2500	125	–	–		6
60275†	PANELF2B/020UNHD840/14G/WH	20	120-347	0-10V	>80	4000K	1x4	2500	125	–	–		5
61625	PANELF2B/020UNHD840/14G/WH	20	120-347	0-10V	>80	4000K	1x4	2500	125	–	–		6
60276†	PANELF2B/020UNHD850/14G/WH	20	120-347	0-10V	>80	5000K	1x4	2500	125	–	–		5
61626	PANELF2B/020UNHD850/14G/WH	20	120-347	0-10V	>80	5000K	1x4	2500	125	–	–		6

Ordering Information (continued)

Item Number	Ordering Abbreviation	Wattage (W)	Voltage (V)	Dimming	CRI	CCT	Dimensions	Lumens	LPW	Options	DLC	MTO*	Case Qty.
60268†	PANELF2B/026UNHD835/14G/WH	26	120-347	0-10V	>80	3500K	1x4	3250	125	–	–		5
61627	PANELF2B/026UNHD835/14G/WH	26	120-347	0-10V	>80	3500K	1x4	3250	125	–	–		6
60269†	PANELF2B/026UNHD840/14G/WH	26	120-347	0-10V	>80	4000K	1x4	3250	125	–	–		5
61628	PANELF2B/026UNHD840/14G/WH	26	120-347	0-10V	>80	4000K	1x4	3250	125	–	–		6
60270†	PANELF2B/026UNHD850/14G/WH	26	120-347	0-10V	>80	5000K	1x4	3250	125	–	–		5
61629	PANELF2B/026UNHD850/14G/WH	26	120-347	0-10V	>80	5000K	1x4	3250	125	–	–		6
60288†	PANELF2B/026UNHD835/24G/WH	26	120-347	0-10V	>80	3500K	2x4	3380	125	–	–		3
61630	PANELF2B/026UNHD835/24G/WH	26	120-347	0-10V	>80	3500K	2x4	3380	125	–	–		4
60289†	PANELF2B/026UNHD840/24G/WH	26	120-347	0-10V	>80	4000K	2x4	3380	125	–	–		3
61631	PANELF2B/026UNHD840/24G/WH	26	120-347	0-10V	>80	4000K	2x4	3380	125	–	–		4
60290†	PANELF2B/026UNHD850/24G/WH	26	120-347	0-10V	>80	5000K	2x4	3380	125	–	–		3
61632	PANELF2B/026UNHD850/24G/WH	26	120-347	0-10V	>80	5000K	2x4	3380	125	–	–		4
60271†	PANELF2B/032UNHD835/24G/WH	32	120-347	0-10V	>80	3500K	2x4	4160	125	–	–		3
61633	PANELF2B/032UNHD835/24G/WH	32	120-347	0-10V	>80	3500K	2x4	4160	125	–	–		4
60272†	PANELF2B/032UNHD840/24G/WH	32	120-347	0-10V	>80	4000K	2x4	4160	125	–	–		3
61634	PANELF2B/032UNHD840/24G/WH	32	120-347	0-10V	>80	4000K	2x4	4160	125	–	–		4
60273†	PANELF2B/032UNHD850/24G/WH	32	120-347	0-10V	>80	5000K	2x4	4160	125	–	–		3
61635	PANELF2B/032UNHD850/24G/WH	32	120-347	0-10V	>80	5000K	2x4	4160	125	–	–		4
60280†	PANELF2B/050UNHD835/24G/WH	50	120-347	0-10V	>80	3500K	2x4	6250	125	–	–		3
61636	PANELF2B/050UNHD835/24G/WH	50	120-347	0-10V	>80	3500K	2x4	6250	125	–	–		4
60281†	PANELF2B/050UNHD840/24G/WH	50	120-347	0-10V	>80	4000K	2x4	6250	125	–	–		3
61637	PANELF2B/050UNHD840/24G/WH	50	120-347	0-10V	>80	4000K	2x4	6250	125	–	–		4
60282†	PANELF2B/050UNHD850/24G/WH	50	120-347	0-10V	>80	5000K	2x4	6250	125	–	–		3
61638	PANELF2B/050UNHD850/24G/WH	50	120-347	0-10V	>80	5000K	2x4	6250	125	–	–		4
60291†	PANELF2B/020UNHD835/22G/WH	20	120-347	0-10V	>80	3500K	2x2	2500	125	–	–		5
61639	PANELF2B/020UNHD835/22G/WH	20	120-347	0-10V	>80	3500K	2x2	2500	125	–	–		6
60292†	PANELF2B/020UNHD840/22G/WH	20	120-347	0-10V	>80	4000K	2x2	2500	125	–	–		5
61640	PANELF2B/020UNHD840/22G/WH	20	120-347	0-10V	>80	4000K	2x2	2500	125	–	–		6
60293†	PANELF2B/020UNHD850/22G/WH	20	120-347	0-10V	>80	5000K	2x2	2500	125	–	–		5
61641	PANELF2B/020UNHD850/22G/WH	20	120-347	0-10V	>80	5000K	2x2	2500	125	–	–		6
60277†	PANELF2B/026UNHD835/22G/WH	26	120-347	0-10V	>80	3500K	2x2	3250	125	–	–		5
61642	PANELF2B/026UNHD835/22G/WH	26	120-347	0-10V	>80	3500K	2x2	3250	125	–	–		6
60278†	PANELF2B/026UNHD840/22G/WH	26	120-347	0-10V	>80	4000K	2x2	3250	125	–	–		5
61643	PANELF2B/026UNHD840/22G/WH	26	120-347	0-10V	>80	4000K	2x2	3250	125	–	–		6
60279†	PANELF2B/026UNHD850/22G/WH	26	120-347	0-10V	>80	5000K	2x2	3250	125	–	–		5
61644	PANELF2B/026UNHD850/22G/WH	26	120-347	0-10V	>80	5000K	2x2	3250	125	–	–		6

*Made To Order
†Indicates that the product is discontinued with inventory

Photometrics

- Average Illuminance (FC) at 30" AFF and avg/min uniformity
- 80/50/20 Reflectances
- Calculations are based on 110ft x 50ft area

			8 ft Mounting Height			10 ft Mounting Height			12 ft Mounting Height		
			On Center Fixture Spacing								
			8'x10'	10'x10'	10'x12'	8'x10'	10'x10'	10'x12'	8'x10'	10'x10'	10'x12'
1'x4'	20W	PANELF2B/020UNVD8XX/14G/WH	30fc/1.5	25fc/1.3	21fc/1.7	29fc/1.6	24fc/1.5	20fc/1.7	28fc/1.7	23fc/1.5	19fc/1.7
	26W	PANELF2B/026UNVD8XX/14G/WH	40fc/1.6	33fc/1.4	28fc/1.8	39fc/1.7	32fc/1.5	27fc/1.8	37fc/1.7	31fc/1.6	26fc/1.8
2'x2'	20W	PANELF2B/020UNVD8XX/22G/WH	32fc/1.5	27fc/1.3	22fc/1.8	31fc/1.6	26fc/1.4	21fc/1.7	30fc/1.6	25fc/1.5	21fc/1.7
	26W	PANELF2B/026UNVD8XX/22G/WH	40fc/1.5	33fc/1.3	28fc/1.8	39fc/1.6	32fc/1.4	27fc/1.7	37fc/1.6	31fc/1.5	26fc/1.7
2'x4'	26W	PANELF2B/026UNVD8XX/24G/WH	42fc/1.5	35fc/1.3	29fc/1.7	41fc/1.6	34fc/1.4	28fc/1.7	39fc/1.6	33fc/1.5	27fc/1.7
	32W	PANELF2B/032UNVD8XX/24G/WH	53fc/1.5	44fc/1.3	36fc/1.7	51fc/1.6	43fc/1.4	35fc/1.7	49fc/1.6	41fc/1.5	34fc/1.7
	50W	PANELF2B/050UNVD8XX/24G/WH	73fc/1.5	60fc/1.3	50fc/1.7	70fc/1.6	59fc/1.5	49fc/1.7	67fc/1.7	56fc/1.6	47fc/1.7

Physical Information

Lamp Description	(A) Length in.	(B) Width in.	(C) Height in.
1x4	47.8	11.8	1.7
2x2	23.82	23.82	1.7
2x4	47.8	21.5	1.7
1x4 EM	47.8	11.8	2.6
2x2 EM	23.82	23.82	2.6
2x4 EM	47.8	21.5	2.6

Weight: 1x4, 2x2: 8.3 lbs (3.8kg) 1x4 EM, 2x2 EM: 10.5 lbs (4.8kg) 2x4: 13.4 lbs (6.1kg) 2x4 EM: 15.6 lbs (7.1kg)

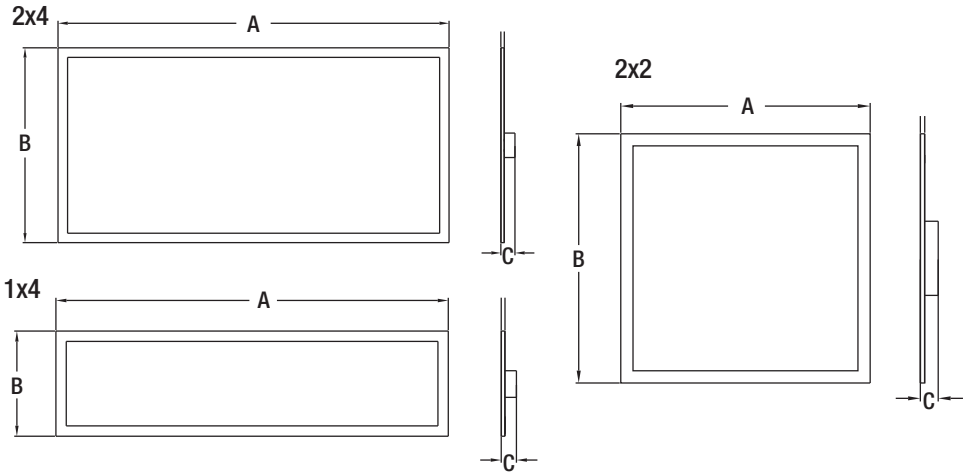

Mounting Accessories

Item Number	Ordering Abbreviation	Item Description
70132*	SMKIT1A/14A/WH	1x4 Surface Mount Kit, White Finish
70380*	SMKIT1A/22A/WH	2x2 Surface Mount Kit, White Finish
70381*	SMKIT1A/24A/WH	2x4 Surface Mount Kit, White Finish
60457	FK1A14GWH	1x4 Flange Kit, White Finish
60458	FK1A22GWH	2x2 Flange Kit, White Finish
60459	FK1A24GWH	2x4 Flange Kit, White Finish

*Not compatible with emergency battery back-up units.

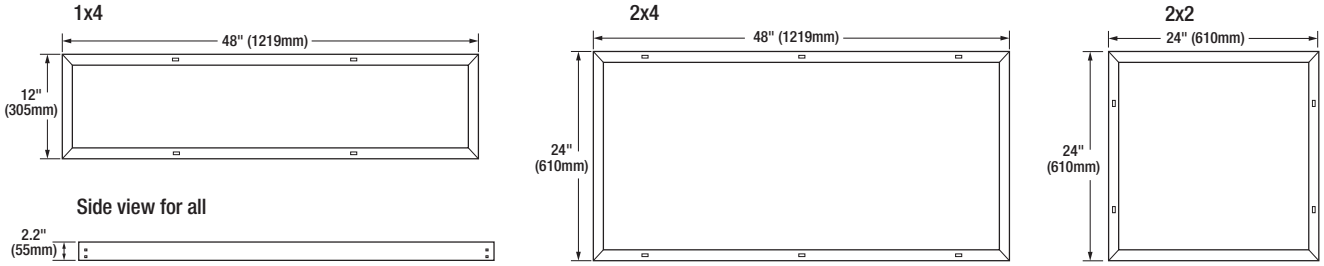

Options Information

Emergency Battery Backup:

Activates when normal power supply to the fixture fails, providing a minimum of 650 lumens (700 nominal lumens) for at least 90 minutes.

Location of Emergency Test Switch

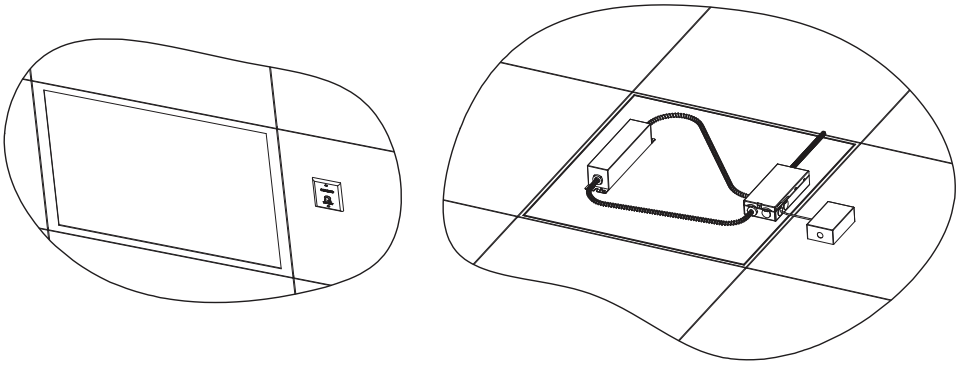

LEDVANCE LLC
200 Ballardvale Street
Wilmington, MA 01887 USA
Phone 1-800-LIGHTBULB (1-800-544-4828)
www.sylvania.com

SYLVANIA and LEDVANCE are registered trademarks.
All other trademarks are those of their respective owners.
Licensee of product trademark SYLVANIA in general lighting.
Specifications subject to change without notice.

/sylvania /sylvania

Name:

Email:

Phone:

© 2020 LEDVANCE LLC

SYLVANIA Luminaires

ValueLED™ Panel

Item #	
Type	
Project	
Notes	
Date	

Application

The SYLVANIA ValueLED Panels are offered in three sizes for illuminating offices, retail or hospitality areas.

Benefits and Features

- Back-lit, offering even and uniform lighting
- 105 LPW
- Junction box compliant with UL and NEC for through wiring
- 3500K, 4000K, 5000K color temperature
- CRI >80
- Offered in 30 and 40 watts
- Energy savings up to 66%
- DLC Listed to maximize rebate opportunities
- EM ready – compatible with the SYLVANIA field installable emergency battery back-up unit (see Accessories for further details)

Electrical

- 120-277VAC
- Power Factor >90%
- THD <20%
- 0-10V dimmable

Rated Life

- 50,000 hours (L_{70})

Warranty

- 5-year

Certifications and Listings

- cETLus
- RoHS
- FCC
- DLC
- IC rated

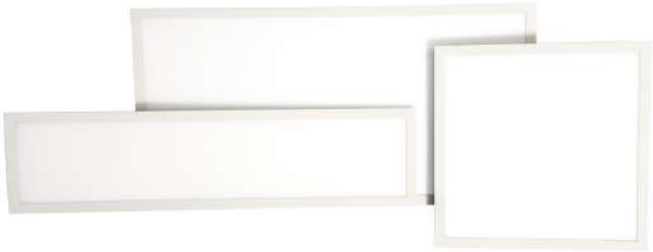

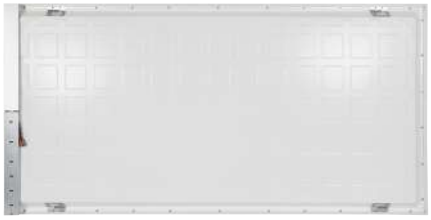

Wattage Comparison

Panel Size	Traditional Source	Traditional System Wattage	LED System Wattage	Energy Savings
1x4	2x28W T8	49	30	39%
	2x32W T8	56	30	46%
2x2	3x17W T8	48	30	38%
	2xU31W T8	56	30	46%
2x4	2x28W T8	49	30	39%
	2x32W T8	56	30	46%
	2x32W T8	56	40	29%
	4x28W T8	97	40	59%
	4x32W T8	116	40	66%

Ordering Guide

PANELF	3A	/	XXX	UNV	D	8	XX	/	XX	G	/	WH
Product Name PANELF = LED Panel	Generation 3A		Wattage 030 = 30 Watts 040 = 40 Watts	Voltage UNV = 120-277V	Dimming D = 0-10V dimming	CRI 8 = >80	Color Temp 35 = 3500K 40 = 4000K 50 = 5000K		Dimensions 14 = 1x4 22 = 2x2 24 = 2x4	Mounting G = Grid		Color / Finish WH = White

Ordering Information

Item Number	Ordering Abbreviation	Power (W)	Input Voltage (V)	Dimming	CRI	Color Temp	Dimensions	Total Fixture Lumens	DLC	LPW
61579	PANELF3A/030UNVD835/14G/WH	30	120-277	0-10V	>80	3500K	1x4	3500	Std	117
61580	PANELF3A/030UNVD840/14G/WH	30	120-277	0-10V	>80	4000K	1x4	3500	Std	117
61581	PANELF3A/030UNVD850/14G/WH	30	120-277	0-10V	>80	5000K	1x4	3500	Std	117
61582	PANELF3A/030UNVD835/22G/WH	30	120-277	0-10V	>80	3500K	2x2	3750	Std	125
61583	PANELF3A/030UNVD840/22G/WH	30	120-277	0-10V	>80	4000K	2x2	3750	Std	125
61584	PANELF3A/030UNVD850/22G/WH	30	120-277	0-10V	>80	5000K	2x2	3700	Std	123
61585	PANELF3A/030UNVD835/24G/WH	30	120-277	0-10V	>80	3500K	2x4	3800	Std	127
61586	PANELF3A/030UNVD840/24G/WH	30	120-277	0-10V	>80	4000K	2x4	3750	Std	125
61587	PANELF3A/030UNVD850/24G/WH	30	120-277	0-10V	>80	5000K	2x4	3650	Std	122
61588	PANELF3A/040UNVD835/24G/WH	40	120-277	0-10V	>80	3500K	2x4	5000	Std	125
61589	PANELF3A/040UNVD840/24G/WH	40	120-277	0-10V	>80	4000K	2x4	4600	Std	115
61590	PANELF3A/040UNVD850/24G/WH	40	120-277	0-10V	>80	5000K	2x4	4600	Std	115

Photometric Data

			8 ft Mounting Height			10 ft Mounting Height			12 ft Mounting Height		
			On Center Fixture Spacing								
			8'x10'	10'x10'	10'x12'	8'x10'	10'x10'	10'x12'	8'x10'	10'x10'	10'x12'
1'x4'	30W	PANELF3A/030UNVD8XX/14G/WH	41fc/1.6	35fc/1.4	32fc/1.7	41fc/1.6	35fc/1.5	30fc/1.4	41fc/1.7	33fc/1.6	29fc/1.3
2'x2'	30W	PANELF3A/030UNVD8XX/22G/WH	46fc/1.6	40fc/1.3	36fc/1.6	46fc/1.6	39fc/1.4	35fc/1.4	46fc/1.6	38fc/1.5	33fc/1.3
2'x4'	30W	PANELF3A/030UNVD8XX/24G/WH	45fc/1.6	39fc/1.3	35fc/1.6	45fc/1.6	39fc/1.4	34fc/1.4	45fc/1.6	37fc/1.5	32fc/1.3
	40W	PANELF3A/040UNVD8XX/24G/WH	54fc/1.6	47fc/1.3	42fc/1.6	54fc/1.6	46fc/1.4	40fc/1.4	54fc/1.6	44fc/1.5	38fc/1.3

Physical Information

Lamp Description	(A) Length (in)	(B) Width (in)	(C) Height (in)
1x4	11.8	47.8	1.7
2x2	23.8	23.8	1.7
2x4	23.8	47.8	1.6

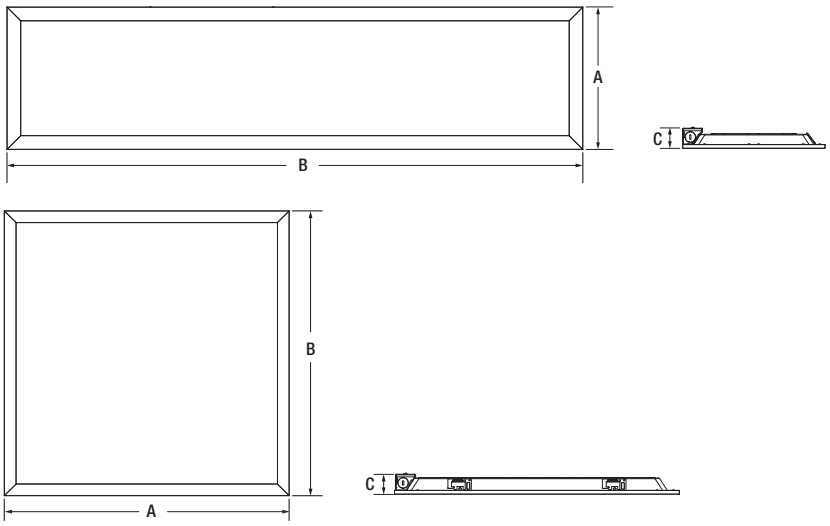

Accessories and Replacement Parts

Item Number	Ordering Abbreviation	Item Description
60888	EMBB1A8WDC	Field installable emergency battery back-up unit
61682	ACCPANELF3AEMBB-BRIDGE2	Metal bridge for installing emergency battery back-up unit to 2x2 and 2x4 panels
61683	ACCPANELF3AEMBB-BRIDGE1	Metal bridge for installing emergency battery back-up unit to 1x4 panels

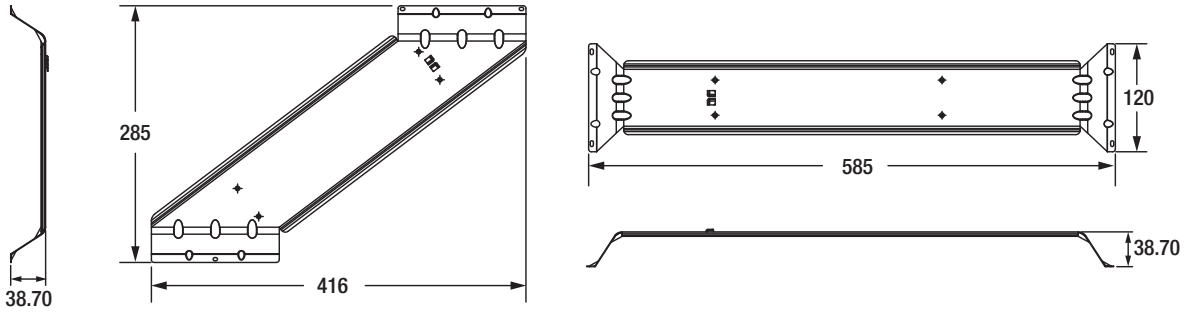

Dimensions in mm

Options Information

Emergency Battery Backup

Emergency Battery Backup: Activates when normal power supply to the fixture fails, providing a minimum of 650 lumens (700 nominal lumens) for at least 90 minutes.

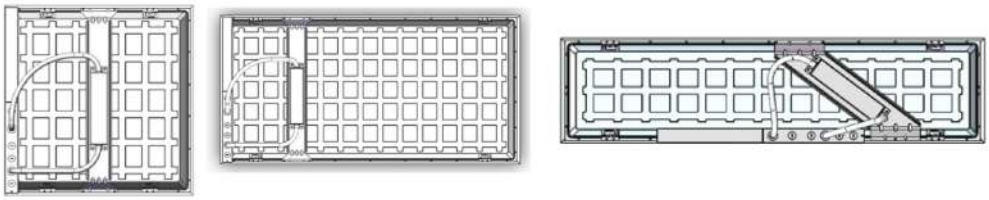

Additional Specifications

- Suitable for use in closets, compliant with NFPA 70, NEC section 410.16 (A)(3) and 410.16 (C)(5)
- cETLus listed to UL1598 standards
- IC and damp rated

LEDVANCE LLC
200 Ballardvale Street
Wilmington, MA 01887 USA
Phone 1-800-LIGHTBULB (1-800-544-4828)
www.sylvania.com

SYLVANIA and LEDVANCE are registered trademarks.
All other trademarks are those of their respective owners.
Licensee of product trademark SYLVANIA in general lighting.
Specifications subject to change without notice.

/sylvania /sylvania

Name:
Email:
Phone:

© 2020 LEDVANCE LLC

SYLVANIA Luminaires

Volumetric Troffer

Catalog #	Type
Project	
Notes	
Date	
Prepared by	

Dimensions

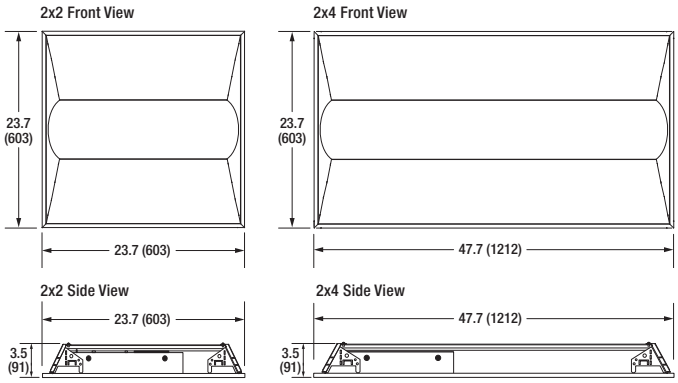

Dimensions in inches (mm).

Product Features

The Volumetric Troffers are environmentally preferable LED alternatives to traditional fluorescent luminaires, offering up to 58% in energy savings. They are offered in two sizes and are ideal for illuminating offices, retail and hospitality areas.

The volumetric design minimizes glare with a lens that extends into the frame, preventing light leaks. SYLVANIA luminaires assure optimum light engine performance for extended service life and rated life (1A: ≥100,000 hours L_{70}, 2A: ≥ 70,000 hours L_{70}).

Wattage Comparison Chart

	Traditional Source	Traditional System Wattage	LED System Wattage	Energy Savings
2x2	3x17W T8	48	35	27%
	2xU31W T8	56	35	38%
	3x17W T8	48	25*	48%
	2xU31W T8	56	25*	55%
2x4	3x28W T8	73	42	42%
	3x32W T8	83	42	49%
	3x28W T8	73	35*	52%
	3x32W T8	83	35*	58%

* Volume2A Version

Specifications

Weight: 2x2: 8.3lbs (3.8kg) Standard 2x4: 13.4lbs (6.1kg) Standard
2x2: 10.5lbs (4.8kg) Emergency 2x4: 15.6lbs (7.1kg) Emergency

Construction: Post painted sheet metal with UV stabilized polycarbonate diffuse curved lens. The standard color is white.

LED System: LED system with a life rating of ≥100,000 hours (1A) and ≥70,000 hours (2A) at L_{70} @ 25°C. Luminaire efficacy up to 138 LPW .

Electrical: Offered in 25, 35 and 42 watts, the luminaire is designed to operate through the 120-277 VAC universal voltage range. The LED driver is a constant current device. The power factor is ≥90% and THD is ≤20%.

Dimming: The driver is 0-10V dimmable (down to 10%). Please reference the dimmer compatibility document (LEDLUM012).

Color Characteristics: CRI>80; CCT of 3500K or 4000K.

Optics: Single white diffuse polycarbonate curved lens.

Options Available: Emergency Battery Backup.

Installation: Luminaire is recessed in T-Grid ceilings.

Operating Temperature: -13°F to +104°F (-25°C to +40°C);
EM: +32°F to +104°F (0°C to +40°C).

Listings: cETLus listed to UL1598C standards and wet rated for locations with a covered ceiling.

Warranty: Standard 5-year luminaire warranty (LEDLUM001).

Note: Specification subject to change without notice. IES files available online.

*DLC Premium only applicable on 2A versions.

Ordering Guide

Item Number:

VOLUME	XX /	XXX	XXX	D	8	XX /	XX	G /	WH /	X
Product Name VOLUME	Generation 1A	Wattage (1A)* 035 = 35 Watts 042 = 42 Watts	Voltage UNV = 120-277V	Dimming D = 0-10V	CRI 8 = >80	CCT 35 = 3500K 40 = 4000K	Dimension 22 = 2x2 24 = 2x4	Mounting G = Grid	Color/Finish WH = White	Option Blank = No Option E = Emergency
	2A	Wattage (2A)** 025 = 25 Watts 035 = 35 Watts								

*35W only available in 2x2 size, 42W only available in 2x4 size
**25W only available in 2x2 size, 35W only available in 2x4 size

Photometric Data

Average Initial Illuminance (FC) at 30" AFF and avg/min uniformity 80/50/20 Reflectances.
Calculations are based on 110ft x 50ft area.

			8 ft Mounting Height			10 ft Mounting Height			12 ft Mounting Height		
			On Center Fixture Spacing			On Center Fixture Spacing			On Center Fixture Spacing		
			8'x10'	10'x10'	10'x12'	8'x10'	10'x10'	10'x12'	8'x10'	10'x10'	10'x12'
2'x2'	25W	VOLUME2A/025UNVD835/22G/WH	41.5/1.48	34.2/1.29	30.3/1.51	40.2/1.55	33.3/1.40	29.2/1.32	38.6/1.60	32.1/1.48	28.1/1.26
		VOLUME2A/025UNVD840/22G/WH	42.0/1.48	34.6/1.29	30.7/1.52	40.8/1.55	33.8/1.40	29.6/1.32	39.2/1.60	32.5/1.49	28.5/1.26
	35W	VOLUME1A/035UNVD835/22G/WH	42.5/1.46	35.2/1.29	31.2/1.64	41.1/1.52	34.1/1.40	29.9/1.35	39.4/1.58	32.7/1.47	28.6/1.30
		VOLUME1A/035UNVD840/22G/WH	42.9/1.46	35.4/1.30	31.4/1.59	41.4/1.53	34.4/1.40	30.1/1.33	39.7/1.57	32.9/1.48	28.8/1.24
2'x4'	35W	VOLUME2A/035UNVD835/24G/WH	57.1/1.47	47.3/1.29	42.0/1.51	55.5/1.54	46.1/1.40	40.5/1.32	53.2/1.59	44.3/1.48	38.9/1.26
		VOLUME2A/035UNVD840/24G/WH	58.0/1.47	48.1/1.29	42.7/1.51	56.4/1.54	46.9/1.40	41.1/1.31	54.1/1.60	45.0/1.48	39.5/1.26
	42W	VOLUME1A/042UNVD835/24G/WH	54.0/1.48	44.8/1.31	39.6/1.45	52.3/1.55	43.5/1.41	38.2/1.30	50.2/1.60	41.7/1.49	36.6/1.26
		VOLUME1A/042UNVD840/24G/WH	58.3/1.48	48.3/1.30	42.7/1.45	56.5/1.55	46.9/1.41	41.2/1.29	54.1/1.59	45.0/1.48	39.5/1.25

*Table also applicable to emergency versions.

Ordering Information

Item Number	Ordering Abbreviation	Power (W)	Input Voltage	Dimming	CRI	Color Temp (CCT)	Size	Total Fixture Lumens	LPW*	DLC**	Options
74352	VOLUME1A/035UNVD835/22G/WH	35	120-277V	0-10V	>80	3500K	2x2	3500	107	Std	–
74353	VOLUME1A/035UNVD840/22G/WH	35	120-277V	0-10V	>80	4000K	2x2	3600	113	Std	–
74441	VOLUME1A/042UNVD835/24G/WH	42	120-277V	0-10V	>80	3500K	2x4	4400	103	Std	–
74442	VOLUME1A/042UNVD840/24G/WH	42	120-277V	0-10V	>80	4000K	2x4	4400	103	Std	–
74354	VOLUME1A/035UNVD835/22G/WH/E	35	120-277V	0-10V	>80	3500K	2x2	3500	107	Std	Emergency
74355	VOLUME1A/035UNVD840/22G/WH/E	35	120-277V	0-10V	>80	4000K	2x2	3600	113	Std	Emergency
74443	VOLUME1A/042UNVD835/24G/WH/E	42	120-277V	0-10V	>80	3500K	2x4	4400	103	Std	Emergency
74444	VOLUME1A/042UNVD840/24G/WH/E	42	120-277V	0-10V	>80	4000K	2x4	4400	103	Std	Emergency
71726	VOLUME2A/025UNVD840/22G/WH	25	120-277V	0-10V	>80	4000K	2x2	3300	136	Prm	–
74309	VOLUME2A/035UNVD835/24G/WH	35	120-277V	0-10V	>80	3500K	2x4	4600	135	Prm	–
74348	VOLUME2A/035UNVD840/24G/WH	35	120-277V	0-10V	>80	4000K	2x4	4600	138	Prm	–
71727	VOLUME2A/025UNVD835/22G/WH/E	25	120-277V	0-10V	>80	3500K	2x2	3200	134	Prm	Emergency
71728	VOLUME2A/025UNVD840/22G/WH/E	25	120-277V	0-10V	>80	4000K	2x2	3300	136	Prm	Emergency
74349	VOLUME2A/035UNVD835/24G/WH/E	35	120-277V	0-10V	>80	3500K	2x4	4600	135	Prm	Emergency
74356	VOLUME2A/035UNVD840/24G/WH/E	35	120-277V	0-10V	>80	4000K	2x4	4600	138	Prm	Emergency

*LPW per LM79 report.
**Prm for DLC Premium, Std for DLC Standard.
For further information and to learn more about utility rebates, contact your local SYLVANIA sales representative.

Options Information

Emergency Battery Backup:

Activates when normal power supply to the fixture fails, providing a minimum of 650 lumens (700 nominal lumens) for at least 90 minutes.

Accessories and Replacement Parts

Item Number	Ordering Abbreviation	Item Description
60457	FK1A14GWH	1x4 Flange Kit, White Finish
60458	FK1A22GWH	2x2 Flange Kit, White Finish
60459	FK1A24GWH	2x4 Flange Kit, White Finish

LEDVANCE LLC
200 Ballardvale Street
Wilmington, MA 01887 USA
Phone 1-800-LIGHTBULB (1-800-544-4828)
www.sylvania.com

SYLVANIA and LEDVANCE are registered trademarks.
All other trademarks are those of their respective owners.
Licensee of product trademark SYLVANIA in general lighting.
Specifications subject to change without notice.

/sylvania /sylvania

© 2019 LEDVANCE LLC

SYLVANIA Luminaires

ValueLED™ Volumetric Troffer

Item #	
Type	
Project	
Notes	
Date	

Application

The ValueLED Volumetric Troffer is offered in two sizes (2'x2' and 2'x4') and are ideal for illuminating offices, retail, hallways, multipurpose rooms and hospitality areas.

Benefits and Features

- All models are DLC Premium listed to maximize rebate opportunities and offer 0-10V dimming to optimize energy savings
- Ideal in retrofit applications offering up to 52% energy savings when compared to traditional lighting technologies
- Offered in two wattage/lumen packages and three color temperatures
- Up to 130 LPW
- 3500K, 4000K, and 5000K color temperature
- CRI >80
- Offered in 28 and 36 watts

Electrical

- 120-277VAC UNV
- Power Factor >90%
- THD <20%
- 0-10V dimmable (down to 10%). Please reference the dimmer compatibility document (LEDLUM012)

Rated Life

- 50,000 hours (L_{70})

Warranty

- 5-year

Ambient Operating Range

- -4°F to +104°F (-20°C to +40°C)
- EM: 32°F to 104°F (0°C to 40°C)

Certifications and Listings

- cETLus classified to UL1598 standards and wet rated for locations with a covered ceiling

Installation

- Luminaire is intended for installation in recessed T-Grid ceilings

Wattage Comparison

Traditional Source	Traditional System Wattage	LED System Wattage	Energy Savings
3 x 17W T8	48	28	42%
2 x U31 T8	56	28	50%
3 x 28W T8	58	36	38%
3 x 32W T8	75	36	52%

Ordering Guide

VOLUME	3A	/	XXX	UNV	D	8	XX	/	XX	G	/	WH	X
Product Name VOLUME	Generation 3A		Wattage 028=28 Watts 036=36 Watts	Voltage UNV = 120-277	Dimming D=0-10V	CRI 8=>80	Color Temp 35=3500 40=4000 50=5000		Dimensions 22=2x2 24=2x4	Mounting G=Grid		Color/Finish WH=White	Option E=Emergency Blank=No option

Ordering Information

Item Number	Ordering Abbreviation	Wattage	Voltage	Dimming	CRI	Color Temp	Lumens	LPW	Emergency
60444	VOLUME3A/028UNVD835/22G/WH	28	120-277	0-10	>80	3500K	3500	125	-
60445	VOLUME3A/028UNVD840/22G/WH	28	120-277	0-10	>80	4000K	3500	125	-
60446	VOLUME3A/028UNVD850/22G/WH	28	120-277	0-10	>80	5000K	3500	125	-
60447	VOLUME3A/028UNVD835/22G/WHE	28	120-277	0-10	>80	3500K	3500	125	Yes
60448	VOLUME3A/028UNVD840/22G/WHE	28	120-277	0-10	>80	4000K	3500	125	Yes
60449	VOLUME3A/028UNVD850/22G/WHE	28	120-277	0-10	>80	5000K	3500	125	Yes
60438	VOLUME3A/036UNVD835/24G/WH	36	120-277	0-10	>80	3500K	4500	130	-
60439	VOLUME3A/036UNVD840/24G/WH	36	120-277	0-10	>80	4000K	4500	130	-
60440	VOLUME3A/036UNVD850/24G/WH	36	120-277	0-10	>80	5000K	4500	130	-
60441	VOLUME3A/036UNVD835/24G/WHE	36	120-277	0-10	>80	3500K	4500	130	Yes
60442	VOLUME3A/036UNVD840/24G/WHE	36	120-277	0-10	>80	4000K	4500	130	Yes
60443	VOLUME3A/036UNVD850/24G/WHE	36	120-277	0-10	>80	5000K	4500	130	Yes

Photometrics

			8 ft Mounting Height			10 ft Mounting Height			12 ft Mounting Height		
			On Center Fixture Spacing								
			8'x10'	10'x10'	10'x12'	8'x10'	10'x10'	10'x12'	8'x10'	10'x10'	10'x12'
2'x2'	28W	VOLUME3A/028UNVD835/22G/WH	44fc/1.5	37fc/1.3	33fc/1.5	43fc/1.6	36fc/1.4	32fc/1.3	41fc/1.6	35fc/1.5	30fc/1.3
		VOLUME3A/028UNVD840/22G/WH	46fc/1.5	39fc/1.3	34fc/1.5	44fc/1.6	37fc/1.4	33fc/1.3	43fc/1.6	36fc/1.5	31fc/1.3
		VOLUME3A/028UNVD850/22G/WH	46fc/1.5	39fc/1.3	34fc/1.5	45fc/1.6	38fc/1.4	33fc/1.3	43fc/1.6	36fc/1.5	32fc/1.3
2'x4'	36W	VOLUME3A/036UNVD835/24G/WH	56fc/1.5	47fc/1.3	42fc/1.5	54fc/1.6	46fc/1.4	40fc/1.3	52fc/1.6	44fc/1.5	38fc/1.3
		VOLUME3A/036UNVD840/24G/WH	58fc/1.5	50fc/1.3	44fc/1.5	57fc/1.6	48fc/1.4	42fc/1.3	55fc/1.6	46fc/1.5	40fc/1.3
		VOLUME3A/036UNVD850/24G/WH	59fc/1.5	50fc/1.3	44fc/1.5	57fc/1.6	48fc/1.4	42fc/1.3	55fc/1.6	46fc/1.5	41fc/1.3

Physical Information

Lamp Description	(A) Length (in.)	(B) Width (in.)	(C) Height (in.)
2x2	23.77	23.77	2.12
2x4	47.71	23.77	2.12
2x2 EM	23.77	23.77	3.38
2x4 EM	47.71	23.77	3.38

2X2

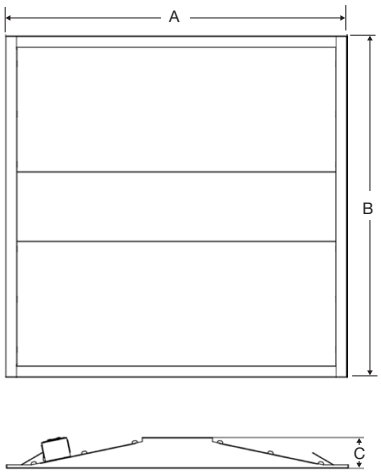

2X4

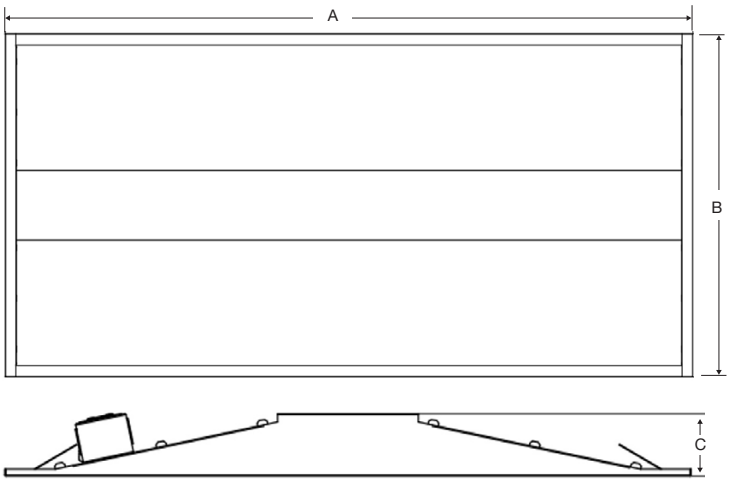

Accessories and Replacement Parts

Item Number	Ordering Abbreviation	Item Description
60457	FK1A14GWH	1x4 Flange Kit, White Finish
60458	FK1A22GWH	2x2 Flange Kit, White Finish
60459	FK1A24GWH	2x4 Flange Kit, White Finish

*Please see Surface Mount Kit installation manual for instructions.

LEDVANCE LLC
200 Ballardvale Street
Wilmington, MA 01887 USA
Phone 1-800-LIGHTBULB (1-800-544-4828)
www.sylvania.com

Name:
Email:
Phone:

SYLVANIA and LEDVANCE are registered trademarks.
All other trademarks are those of their respective owners.
Licensee of product trademark SYLVANIA in general lighting.
Specifications subject to change without notice.

/sylvania /sylvania

© 2018 LEDVANCE LLC

SYLVANIA Luminaires

UltraLED™ Volumetric Troffer

Item #	
Type	
Project	
Notes	
Date	

Application

The UltraLED Volumetric Troffer is offered in two sizes (2'x2' and 2'x4') and is ideal for illuminating offices, retail spaces, hallways, multipurpose rooms and hospitality areas.

Benefits and Features

- All models are DLC Premium listed to maximize rebate opportunities
- Ideal in retrofit applications offering up to 59% energy savings when compared to traditional lighting technologies. Additional energy savings can be obtained by taking advantage of the standard 0-10V dimming driver.
- Offered in two wattage/lumen packages, two voltage ranges, and three color temperatures
- Up to 125 LPW
- 3500K, 4000K, and 5000K color temperature
- CRI > 80

Electrical

- Offered in 26 and 34 watts
- 120-277VAC (UNV)
- 120-347VAC (UNH)
- Power Factor 90%
- THD <20%
- 0-10V dimmable

Rated Life

- 100,000 hours (L_{70})

Warranty

- 5-year

Ambient Operating Range

- -4°F to +120°F (-20°C to +50°C)
- 32°F to +120°F (0°C to +50°C) (Emergency Versions)

Certifications and Listings

- cETLus
- RoHS
- FCC
- DLC Premium

Wattage Comparison

	Traditional Source	Traditional System Wattage	LED System Wattage	Energy Savings
2x2	3 x 17W T8	48	26	46%
	2 x U31W T8	56	26	53%
2x4	3 x 28W T8	73	34	53%
	3 x 32W T8	83	34	59%

Installation

- Luminaire lays in standard 15/16" and 9/16" T-grid ceilings.

Ordering Guide

VOLUME	4A	/	XXX	UNX	D	8	XX	/	XX	G	/	WH	/	Option
Product Name VOLUME	Generation 4A		Wattage 026 = 26 Watts 034 = 34 Watts	Voltage UNV = 120-277V UNH = 120-347V	Dimming D = 0-10V	CRI 8 = >80	CCT 35 = 3500K 40 = 4000K 50 = 5000K		Dimension 22 = 2x2 24 = 2x4	Mounting G = Grid		Color WH = White		Blank = No option E = Emergency Back-up D = Daylight/Motion Sensor DE = Dual Emergency and Daylight/Motion Sensor

Ordering Information

Item Number	Ordering Abbreviation	Power (W)	Input Voltage	Dimming	CRI	Color Temp (CCT)	Lumens	LPW	DLC Listed	MTO*	Options
60878	VOLUME4A/034UNVD835/24G/WH	34	120-277	0-10V	>80	3500K	4250	125	Prm	–	–
60879	VOLUME4A/034UNVD840/24G/WH	34	120-277	0-10V	>80	4000K	4250	125	Prm	–	–
60880	VOLUME4A/034UNVD850/24G/WH	34	120-277	0-10V	>80	5000K	4250	125	Prm	–	–
60869	VOLUME4A/026UNVD835/22G/WH	26	120-277	0-10V	>80	3500K	3250	125	Prm	–	–
60870	VOLUME4A/026UNVD840/22G/WH	26	120-277	0-10V	>80	4000K	3250	125	Prm	–	–
60871	VOLUME4A/026UNVD850/22G/WH	26	120-277	0-10V	>80	5000K	3250	125	Prm	–	–
60884	VOLUME4A/034UNVD835/24G/WH/D	34	120-277	0-10V	>80	3500K	4250	125	Prm	MTO	Sensor
60885	VOLUME4A/034UNVD840/24G/WH/D	34	120-277	0-10V	>80	4000K	4250	125	Prm	MTO	Sensor
60886	VOLUME4A/034UNVD850/24G/WH/D	34	120-277	0-10V	>80	5000K	4250	125	Prm	MTO	Sensor
60875	VOLUME4A/026UNVD835/22G/WH/D	26	120-277	0-10V	>80	3500K	3250	125	Prm	MTO	Sensor
60876	VOLUME4A/026UNVD840/22G/WH/D	26	120-277	0-10V	>80	4000K	3250	125	Prm	MTO	Sensor
60877	VOLUME4A/026UNVD850/22G/WH/D	26	120-277	0-10V	>80	5000K	3250	125	Prm	MTO	Sensor
60857	VOLUME4A/034UNVD835/24G/WH/E	34	120-277	0-10V	>80	3500K	4250	125	Prm	MTO	Emergency
60858	VOLUME4A/034UNVD840/24G/WH/E	34	120-277	0-10V	>80	4000K	4250	125	Prm	MTO	Emergency
60859	VOLUME4A/034UNVD850/24G/WH/E	34	120-277	0-10V	>80	5000K	4250	125	Prm	MTO	Emergency
60863	VOLUME4A/026UNVD835/22G/WH/E	26	120-277	0-10V	>80	3500K	3250	125	Prm	MTO	Emergency
60864	VOLUME4A/026UNVD840/22G/WH/E	26	120-277	0-10V	>80	4000K	3250	125	Prm	MTO	Emergency
60865	VOLUME4A/026UNVD850/22G/WH/E	26	120-277	0-10V	>80	5000K	3250	125	Prm	MTO	Emergency
60860	VOLUME4A/034UNVD835/24G/WH/DE	34	120-277	0-10V	>80	3500K	4250	125	Prm	MTO	Sensor, Emergency
60861	VOLUME4A/034UNVD840/24G/WH/DE	34	120-277	0-10V	>80	4000K	4250	125	Prm	MTO	Sensor, Emergency
60862	VOLUME4A/034UNVD850/24G/WH/DE	34	120-277	0-10V	>80	5000K	4250	125	Prm	MTO	Sensor, Emergency
60866	VOLUME4A/026UNVD835/22G/WH/DE	26	120-277	0-10V	>80	3500K	3250	125	Prm	MTO	Sensor, Emergency
60867	VOLUME4A/026UNVD840/22G/WH/DE	26	120-277	0-10V	>80	4000K	3250	125	Prm	MTO	Sensor, Emergency
60868	VOLUME4A/026UNVD850/22G/WH/DE	26	120-277	0-10V	>80	5000K	3250	125	Prm	MTO	Sensor, Emergency
60881	VOLUME4A/034UNHD835/24G/WH	34	120-347	0-10V	>80	3500K	4250	125	Prm	MTO	–
60882	VOLUME4A/034UNHD840/24G/WH	34	120-347	0-10V	>80	4000K	4250	125	Prm	MTO	–
60883	VOLUME4A/034UNHD850/24G/WH	34	120-347	0-10V	>80	5000K	4250	125	Prm	MTO	–
60872	VOLUME4A/026UNHD835/22G/WH	26	120-347	0-10V	>80	3500K	3250	125	Prm	MTO	–
60873	VOLUME4A/026UNHD840/22G/WH	26	120-347	0-10V	>80	4000K	3250	125	Prm	MTO	–
60874	VOLUME4A/026UNHD850/22G/WH	26	120-347	0-10V	>80	5000K	3250	125	Prm	MTO	–

*Made To Order

Ordering Guide (with Partner Sensor Options)

VOLUME	4A	/	XXX	UNV	D	8	XX	/	XX	G	/	WH	/	XX
Product Name VOLUME	Generation 4A		Wattage 026 = 26 Watts 034 = 34 Watts	Voltage UNV = 120-277V	Dimming D = 0-10V	CRI 8 = >80	Color Temp 35 = 3500K 40 = 4000K 50 = 5000K		Dimensions 22 = 2x2 24 = 2x4	Mounting G = Grid		Color/Finish WH = white		Partner Sensor Options A1 = Enlighted Micro Sensor B1 = Enlighted Micro Sensor with Emergency Battery Back-up A2 = Lutron Vive Integral Fixture Control (RF only) B2 = Lutron Vive Integral Fixture Control (RF only) with Emergency Battery Back-up A3 = Lutron Vive Integral Fixture Control with Sensor B3 = Lutron Vive Integral Fixture Control with Sensor and Emergency Battery Back-up A4 = OSRAM SensiLUM B4 = OSRAM SensiLUM with Emergency Battery Back-up A5 = OSRAM ENCELIUM CLM B5 = OSRAM ENCELIUM CLM with Emergency Battery Back-up A6 = OSRAM ZigBee CLM B6 = OSRAM ZigBee CLM with Emergency Battery Back-up

Enlighted Micro Sensor

LUTRON Vive Sensor

OSRAM SensiLUM Sensor

enlighted™ A Siemens Company

LUTRON®

OSRAM SensiLUM™ Included

OSRAM CLM Included

Ordering Information (continued)

Item Number	Ordering Abbreviation	Power (W)	Input Voltage	Dimming	CRI	Color Temp (CCT)	Lumens	LPW	DLC Listed	MTO*	Options
Partner Sensor Options											
65085	VOLUME4A/034UNVD835/24G/WH/A1	34	120-277	0-10V	80	3500K	4,250	125	Prm	MTO	Enlighted** Micro Sensor
65086	VOLUME4A/034UNVD840/24G/WH/A1	34	120-277	0-10V	80	4000K	4,250	125	Prm	MTO	Enlighted** Micro Sensor
65087	VOLUME4A/034UNVD850/24G/WH/A1	34	120-277	0-10V	80	5000K	4,250	125	Prm	MTO	Enlighted** Micro Sensor
65088	VOLUME4A/026UNVD835/22G/WH/A1	26	120-277	0-10V	80	3500K	3,250	125	Prm	MTO	Enlighted** Micro Sensor
65089	VOLUME4A/026UNVD840/22G/WH/A1	26	120-277	0-10V	80	4000K	3,250	125	Prm	MTO	Enlighted** Micro Sensor
65090	VOLUME4A/026UNVD850/22G/WH/A1	26	120-277	0-10V	80	5000K	3,250	125	Prm	MTO	Enlighted** Micro Sensor
65091	VOLUME4A/034UNVD835/24G/WH/B1	34	120-277	0-10V	80	3500K	4,250	125	Prm	MTO	Enlighted** Micro Sensor with Emergency Battery Back-up
65092	VOLUME4A/034UNVD840/24G/WH/B1	34	120-277	0-10V	80	4000K	4,250	125	Prm	MTO	Enlighted** Micro Sensor with Emergency Battery Back-up
65093	VOLUME4A/034UNVD850/24G/WH/B1	34	120-277	0-10V	80	5000K	4,250	125	Prm	MTO	Enlighted** Micro Sensor with Emergency Battery Back-up
65094	VOLUME4A/026UNVD835/22G/WH/B1	26	120-277	0-10V	80	3500K	3,250	125	Prm	MTO	Enlighted** Micro Sensor with Emergency Battery Back-up
65095	VOLUME4A/026UNVD840/22G/WH/B1	26	120-277	0-10V	80	4000K	3,250	125	Prm	MTO	Enlighted** Micro Sensor with Emergency Battery Back-up
65096	VOLUME4A/026UNVD850/22G/WH/B1	26	120-277	0-10V	80	5000K	3,250	125	Prm	MTO	Enlighted** Micro Sensor with Emergency Battery Back-up
65017	VOLUME4A/034UNVD835/24G/WH/A2	34	120-277	0-10V	80	3500K	4,250	125	Prm	MTO	Lutron Vive Integral Fixture Control (RF only)
65018	VOLUME4A/034UNVD840/24G/WH/A2	34	120-277	0-10V	80	4000K	4,250	125	Prm	MTO	Lutron Vive Integral Fixture Control (RF only)
65019	VOLUME4A/034UNVD850/24G/WH/A2	34	120-277	0-10V	80	5000K	4,250	125	Prm	MTO	Lutron Vive Integral Fixture Control (RF only)
65020	VOLUME4A/026UNVD835/22G/WH/A2	26	120-277	0-10V	80	3500K	3,250	125	Prm	MTO	Lutron Vive Integral Fixture Control (RF only)
65021	VOLUME4A/026UNVD840/22G/WH/A2	26	120-277	0-10V	80	4000K	3,250	125	Prm	MTO	Lutron Vive Integral Fixture Control (RF only)
65022	VOLUME4A/026UNVD850/22G/WH/A2	26	120-277	0-10V	80	5000K	3,250	125	Prm	MTO	Lutron Vive Integral Fixture Control (RF only)
65023	VOLUME4A/034UNVD835/24G/WH/B2	34	120-277	0-10V	80	3500K	4,250	125	Prm	MTO	Lutron Vive Integral Fixture Control (RF only) with Emergency Battery Back-up
65024	VOLUME4A/034UNVD840/24G/WH/B2	34	120-277	0-10V	80	4000K	4,250	125	Prm	MTO	Lutron Vive Integral Fixture Control (RF only) with Emergency Battery Back-up
65025	VOLUME4A/034UNVD850/24G/WH/B2	34	120-277	0-10V	80	5000K	4,250	125	Prm	MTO	Lutron Vive Integral Fixture Control (RF only) with Emergency Battery Back-up
65026	VOLUME4A/026UNVD835/22G/WH/B2	26	120-277	0-10V	80	3500K	3,250	125	Prm	MTO	Lutron Vive Integral Fixture Control (RF only) with Emergency Battery Back-up
65027	VOLUME4A/026UNVD840/22G/WH/B2	26	120-277	0-10V	80	4000K	3,250	125	Prm	MTO	Lutron Vive Integral Fixture Control (RF only) with Emergency Battery Back-up
65029	VOLUME4A/034UNVD835/24G/WH/A3	34	120-277	0-10V	80	3500K	4,250	125	Prm	MTO	Lutron Vive Integral Fixture Control with Sensor
65030	VOLUME4A/034UNVD840/24G/WH/A3	34	120-277	0-10V	80	4000K	4,250	125	Prm	MTO	Lutron Vive Integral Fixture Control with Sensor
65031	VOLUME4A/034UNVD850/24G/WH/A3	34	120-277	0-10V	80	5000K	4,250	125	Prm	MTO	Lutron Vive Integral Fixture Control with Sensor
65032	VOLUME4A/026UNVD835/22G/WH/A3	26	120-277	0-10V	80	3500K	3,250	125	Prm	MTO	Lutron Vive Integral Fixture Control with Sensor
65033	VOLUME4A/026UNVD840/22G/WH/A3	26	120-277	0-10V	80	4000K	3,250	125	Prm	MTO	Lutron Vive Integral Fixture Control with Sensor
65034	VOLUME4A/026UNVD850/22G/WH/A3	26	120-277	0-10V	80	5000K	3,250	125	Prm	MTO	Lutron Vive Integral Fixture Control with Sensor
65035	VOLUME4A/034UNVD835/24G/WH/B3	34	120-277	0-10V	80	3500K	4,250	125	Prm	MTO	Lutron Vive Integral Fixture Control with Sensor and Emergency Battery Back-up
65036	VOLUME4A/034UNVD840/24G/WH/B3	34	120-277	0-10V	80	4000K	4,250	125	Prm	MTO	Lutron Vive Integral Fixture Control with Sensor and Emergency Battery Back-up
65037	VOLUME4A/034UNVD850/24G/WH/B3	34	120-277	0-10V	80	5000K	4,250	125	Prm	MTO	Lutron Vive Integral Fixture Control with Sensor and Emergency Battery Back-up
65038	VOLUME4A/026UNVD835/22G/WH/B3	26	120-277	0-10V	80	3500K	3,250	125	Prm	MTO	Lutron Vive Integral Fixture Control with Sensor and Emergency Battery Back-up
65039	VOLUME4A/026UNVD840/22G/WH/B3	26	120-277	0-10V	80	4000K	3,250	125	Prm	MTO	Lutron Vive Integral Fixture Control with Sensor and Emergency Battery Back-up
65040	VOLUME4A/026UNVD850/22G/WH/B3	26	120-277	0-10V	80	5000K	3,250	125	Prm	MTO	Lutron Vive Integral Fixture Control with Sensor and Emergency Battery Back-up
65028	VOLUME4A/026UNVD850/22G/WH/B2	26	120-277	0-10V	80	5000K	3,250	125	Prm	MTO	Lutron Vive Integral Fixture Control (RF only) with Emergency Battery Back-up
65073	VOLUME4A/034UNVD835/24G/WH/A4	34	120-277	0-10V	80	3500K	4,250	125	Prm	MTO	OSRAM SensiLUM
65074	VOLUME4A/034UNVD840/24G/WH/A4	34	120-277	0-10V	80	4000K	4,250	125	Prm	MTO	OSRAM SensiLUM
65075	VOLUME4A/034UNVD850/24G/WH/A4	34	120-277	0-10V	80	5000K	4,250	125	Prm	MTO	OSRAM SensiLUM
65076	VOLUME4A/026UNVD835/22G/WH/A4	26	120-277	0-10V	80	3500K	3,250	125	Prm	MTO	OSRAM SensiLUM
65077	VOLUME4A/026UNVD840/22G/WH/A4	26	120-277	0-10V	80	4000K	3,250	125	Prm	MTO	OSRAM SensiLUM
65078	VOLUME4A/026UNVD850/22G/WH/A4	26	120-277	0-10V	80	5000K	3,250	125	Prm	MTO	OSRAM SensiLUM
65079	VOLUME4A/034UNVD835/24G/WH/B4	34	120-277	0-10V	80	3500K	4,250	125	Prm	MTO	OSRAM SensiLUM with Emergency Battery Back-up
65080	VOLUME4A/034UNVD840/24G/WH/B4	34	120-277	0-10V	80	4000K	4,250	125	Prm	MTO	OSRAM SensiLUM with Emergency Battery Back-up
65081	VOLUME4A/034UNVD850/24G/WH/B4	34	120-277	0-10V	80	5000K	4,250	125	Prm	MTO	OSRAM SensiLUM with Emergency Battery Back-up
65082	VOLUME4A/026UNVD835/22G/WH/B4	26	120-277	0-10V	80	3500K	3,250	125	Prm	MTO	OSRAM SensiLUM with Emergency Battery Back-up
65083	VOLUME4A/026UNVD840/22G/WH/B4	26	120-277	0-10V	80	4000K	3,250	125	Prm	MTO	OSRAM SensiLUM with Emergency Battery Back-up
65084	VOLUME4A/026UNVD850/22G/WH/B4	26	120-277	0-10V	80	5000K	3,250	125	Prm	MTO	OSRAM SensiLUM with Emergency Battery Back-up
65061	VOLUME4A/034UNVD835/24G/WH/A5	34	120-277	0-10V	80	3500K	4,250	125	Prm	MTO	OSRAM ENCELIUM CLM
65062	VOLUME4A/034UNVD840/24G/WH/A5	34	120-277	0-10V	80	4000K	4,250	125	Prm	MTO	OSRAM ENCELIUM CLM
65063	VOLUME4A/034UNVD850/24G/WH/A5	34	120-277	0-10V	80	5000K	4,250	125	Prm	MTO	OSRAM ENCELIUM CLM

*Made To Order
**Default: Independent Lighting/One

Ordering Information (continued)

Item Number	Ordering Abbreviation	Power (W)	Input Voltage	Dimming	CRI	Color Temp (CCT)	Lumens	LPW	DLC Listed	MTO*	Options
65064	VOLUME4A/026UNVD835/22G/WH/A5	26	120-277	0-10V	80	3500K	3,250	125	Prm	MTO	OSRAM ENCELIUM CLM
65065	VOLUME4A/026UNVD840/22G/WH/A5	26	120-277	0-10V	80	4000K	3,250	125	Prm	MTO	OSRAM ENCELIUM CLM
65066	VOLUME4A/026UNVD850/22G/WH/A5	26	120-277	0-10V	80	5000K	3,250	125	Prm	MTO	OSRAM ENCELIUM CLM
65067	VOLUME4A/034UNVD835/24G/WH/B5	34	120-277	0-10V	80	3500K	4,250	125	Prm	MTO	OSRAM ENCELIUM CLM with Emergency Battery Back-up
65068	VOLUME4A/034UNVD840/24G/WH/B5	34	120-277	0-10V	80	4000K	4,250	125	Prm	MTO	OSRAM ENCELIUM CLM with Emergency Battery Back-up
65069	VOLUME4A/034UNVD850/24G/WH/B5	34	120-277	0-10V	80	5000K	4,250	125	Prm	MTO	OSRAM ENCELIUM CLM with Emergency Battery Back-up
65070	VOLUME4A/026UNVD835/22G/WH/B5	26	120-277	0-10V	80	3500K	3,250	125	Prm	MTO	OSRAM ENCELIUM CLM with Emergency Battery Back-up
65071	VOLUME4A/026UNVD840/22G/WH/B5	26	120-277	0-10V	80	4000K	3,250	125	Prm	MTO	OSRAM ENCELIUM CLM with Emergency Battery Back-up
65072	VOLUME4A/026UNVD850/22G/WH/B5	26	120-277	0-10V	80	5000K	3,250	125	Prm	MTO	OSRAM ENCELIUM CLM with Emergency Battery Back-up
65049	VOLUME4A/034UNVD835/24G/WH/A6	34	120-277	0-10V	80	3500K	4,250	125	Prm	MTO	OSRAM ZigBee CLM
65050	VOLUME4A/034UNVD840/24G/WH/A6	34	120-277	0-10V	80	4000K	4,250	125	Prm	MTO	OSRAM ZigBee CLM
65051	VOLUME4A/034UNVD850/24G/WH/A6	34	120-277	0-10V	80	5000K	4,250	125	Prm	MTO	OSRAM ZigBee CLM
65052	VOLUME4A/026UNVD835/22G/WH/A6	26	120-277	0-10V	80	3500K	3,250	125	Prm	MTO	OSRAM ZigBee CLM
65053	VOLUME4A/026UNVD840/22G/WH/A6	26	120-277	0-10V	80	4000K	3,250	125	Prm	MTO	OSRAM ZigBee CLM
65054	VOLUME4A/026UNVD840/22G/WH/A6	26	120-277	0-10V	80	5000K	3,250	125	Prm	MTO	OSRAM ZigBee CLM
65055	VOLUME4A/034UNVD835/24G/WH/B6	34	120-277	0-10V	80	3500K	4,250	125	Prm	MTO	OSRAM ZigBee CLM with Emergency Battery Back-up
65056	VOLUME4A/034UNVD840/24G/WH/B6	34	120-277	0-10V	80	4000K	4,250	125	Prm	MTO	OSRAM ZigBee CLM with Emergency Battery Back-up
65057	VOLUME4A/034UNVD850/24G/WH/B6	34	120-277	0-10V	80	5000K	4,250	125	Prm	MTO	OSRAM ZigBee CLM with Emergency Battery Back-up
65058	VOLUME4A/026UNVD835/22G/WH/B6	26	120-277	0-10V	80	3500K	3,250	125	Prm	MTO	OSRAM ZigBee CLM with Emergency Battery Back-up
65059	VOLUME4A/026UNVD840/22G/WH/B6	26	120-277	0-10V	80	4000K	3,250	125	Prm	MTO	OSRAM ZigBee CLM with Emergency Battery Back-up
65060	VOLUME4A/026UNVD850/22G/WH/B6	26	120-277	0-10V	80	5000K	3,250	125	Prm	MTO	OSRAM ZigBee CLM with Emergency Battery Back-up

*Made To Order

Physical Information

Lamp Description	(A) Length in (mm)	(B) Width	(C) Height
2x2	23.7" (604)	23.7" (604)	3.6" (92)
2x4	47.7" (1213)	23.7" (604)	3.6" (92)

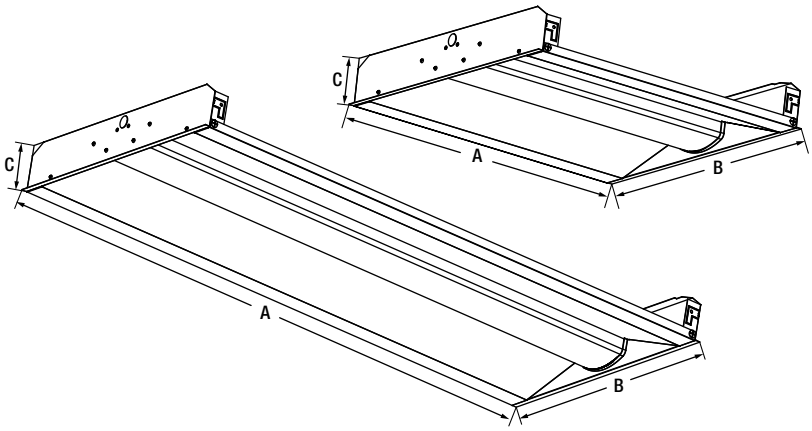

Accessories

Item Number	Ordering Abbreviation	Item Description
60457	FK1A/14G/WH	1x4 Flange Kit, White Finish
60458	FK1A/22G/WH	2x2 Flange Kit, White Finish
60459	FK1A/24G/WH	2x4 Flange Kit, White Finish

Photometric Data

		8 ft Mounting Height			10 ft Mounting Height			12 ft Mounting Height		
		On Center Fixture Spacing								
		8'x10'	10'x10'	10'x12'	8'x10'	10'x10'	10'x12'	8'x10'	10'x10'	10'x12'
2'x2' 26W	VOLUME4A/026UNVD835/22G/WH	39fc/1.5	32fc/1.3	27fc/1.8	38fc/1.6	31fc/1.4	26fc/1.7	36fc/1.6	30fc/1.5	25fc/1.7
	VOLUME4A/026UNVD840/22G/WH	39fc/1.5	32fc/1.3	26fc/1.8	38fc/1.6	31fc/1.4	26fc/1.7	36fc/1.6	30fc/1.5	25fc/1.7
	VOLUME4A/026UNVD850/22G/WH	39fc/1.5	32fc/1.3	27fc/1.8	38fc/1.6	32fc/1.4	26fc/1.7	36fc/1.6	30fc/1.5	25fc/1.7
	VOLUME4A/026UNVD835/22G/WH/E	39fc/1.5	32fc/1.3	27fc/1.8	38fc/1.6	31fc/1.4	26fc/1.7	36fc/1.6	30fc/1.5	25fc/1.7
	VOLUME4A/026UNVD840/22G/WH/E	39fc/1.5	32fc/1.3	26fc/1.8	38fc/1.6	31fc/1.4	26fc/1.7	36fc/1.6	30fc/1.5	25fc/1.7
	VOLUME4A/026UNVD850/22G/WH/E	39fc/1.5	32fc/1.3	27fc/1.8	38fc/1.6	32fc/1.4	26fc/1.7	36fc/1.6	30fc/1.5	25fc/1.7
	VOLUME4A/026UNVD835/22G/WH/D	39fc/1.5	32fc/1.3	27fc/1.8	38fc/1.6	31fc/1.4	26fc/1.7	36fc/1.6	30fc/1.5	25fc/1.7
	VOLUME4A/026UNVD840/22G/WH/D	39fc/1.5	32fc/1.3	26fc/1.8	38fc/1.6	31fc/1.4	26fc/1.7	36fc/1.6	30fc/1.5	25fc/1.7
	VOLUME4A/026UNVD850/22G/WH/D	39fc/1.5	32fc/1.3	27fc/1.8	38fc/1.6	32fc/1.4	26fc/1.7	36fc/1.6	30fc/1.5	25fc/1.7
	VOLUME4A/026UNHD835/22G/WH	37fc/1.5	31fc/1.3	26fc/1.8	36fc/1.6	30fc/1.4	25fc/1.7	35fc/1.6	29fc/1.5	24fc/1.7
	VOLUME4A/026UNHD840/22G/WH	38fc/1.5	31fc/1.3	26fc/1.8	36fc/1.6	30fc/1.4	25fc/1.7	35fc/1.6	29fc/1.5	24fc/1.7
	VOLUME4A/026UNHD850/22G/WH	38fc/1.5	32fc/1.3	26fc/1.8	37fc/1.6	31fc/1.4	26fc/1.7	36fc/1.6	30fc/1.5	25fc/1.7
2'x4' 34W	VOLUME4A/034UNVD835/24G/WH	53fc/1.5	44fc/1.3	36fc/1.8	51fc/1.6	43fc/1.4	35fc/1.7	49fc/1.6	41fc/1.5	34fc/1.7
	VOLUME4A/034UNVD840/24G/WH	52fc/1.5	43fc/1.3	36fc/1.8	51fc/1.6	42fc/1.4	35fc/1.7	49fc/1.6	41fc/1.5	34fc/1.7
	VOLUME4A/034UNVD850/24G/WH	52fc/1.5	43fc/1.3	36fc/1.8	51fc/1.6	42fc/1.4	35fc/1.7	49fc/1.6	41fc/1.5	34fc/1.7
	VOLUME4A/034UNVD835/24G/WH/E	53fc/1.5	44fc/1.3	36fc/1.8	51fc/1.6	43fc/1.4	35fc/1.7	49fc/1.6	41fc/1.5	34fc/1.7
	VOLUME4A/034UNVD840/24G/WH/E	52fc/1.5	43fc/1.3	36fc/1.8	51fc/1.6	42fc/1.4	35fc/1.7	49fc/1.6	41fc/1.5	34fc/1.7
	VOLUME4A/034UNVD850/24G/WH/E	52fc/1.5	43fc/1.3	36fc/1.8	51fc/1.6	42fc/1.4	35fc/1.7	49fc/1.6	41fc/1.5	34fc/1.7
	VOLUME4A/034UNVD835/24G/WH/D	53fc/1.5	44fc/1.3	36fc/1.8	51fc/1.6	43fc/1.4	35fc/1.7	49fc/1.6	41fc/1.5	34fc/1.7
	VOLUME4A/034UNVD840/24G/WH/D	52fc/1.5	43fc/1.3	36fc/1.8	51fc/1.6	42fc/1.4	35fc/1.7	49fc/1.6	41fc/1.5	34fc/1.7
	VOLUME4A/034UNVD850/24G/WH/D	52fc/1.5	43fc/1.3	36fc/1.8	51fc/1.6	42fc/1.4	35fc/1.7	49fc/1.6	41fc/1.5	34fc/1.7
	VOLUME4A/034UNHD835/24G/WH	53fc/1.5	44fc/1.3	36fc/1.8	51fc/1.6	43fc/1.4	35fc/1.7	49fc/1.6	41fc/1.5	34fc/1.7
	VOLUME4A/034UNHD840/24G/WH	54fc/1.5	45fc/1.3	37fc/1.8	53fc/1.5	44fc/1.4	36fc/1.7	51fc/1.6	42fc/1.5	35fc/1.7
	VOLUME4A/034UNHD850/24G/WH	53fc/1.5	44fc/1.3	37fc/1.8	52fc/1.6	43fc/1.4	36fc/1.7	50fc/1.6	42fc/1.5	34fc/1.7

Note: Calculations are based on 110ft x 50ft area.

LEDVANCE LLC
200 Ballardvale Street
Wilmington, MA 01887 USA
Phone 1-800-LIGHTBULB (1-800-544-4828)
www.sylvania.com

Name:
Email:
Phone:

SYLVANIA and LEDVANCE are registered trademarks.
All other trademarks are those of their respective owners.
Licensee of product trademark SYLVANIA in general lighting.
Specifications subject to change without notice.

/sylvania /sylvania

© 2019 LEDVANCE LLC

SYLVANIA Luminaires

ValueLED™ Lumen Selectable Volumetric Troffer

Item #	
Type	
Project	
Notes	
Date	

Application

The ValueLED Volumetric Troffer is offered in three sizes (1'x4', 2'x2', and 2'x4') and is ideal for illuminating offices, retail spaces, hallways, multipurpose rooms and hospitality areas.

Benefits and Features

- Lumen selectability increases the versatility of this product
- All models are DLC Premium listed to maximize rebate opportunities
- Ideal in retrofit applications, offering up to 61% energy savings when compared to traditional lighting technologies
- Additional energy savings can be obtained by taking advantage of the standard 0-10V dimming driver
- Up to 125 LPW
- 3500K, 4000K or 5000K color temperature
- 0-10V Dimmable
- CRI >80

Electrical

- 120-277VAC
- THD <20%
- Power Factor >90%

Rated Life

- 50,000 hours (L_{70})

Warranty

- 5-year

Ambient Operating Range

- -4°F to +120°F (-20°C to +50°C)
- 32°F to +120°F (0°C to +50°C) (Emergency Versions)

Wattage Comparison

Traditional Source	Traditional System Wattage	LED System Wattage	Energy Savings
2x28W T8	49	20	59%
2x32W T8	56	25	55%
3x28W T8	64	30	53%
3x32W T8	75	34	55%
4x28W T8	97	38	61%
4x32W T8	116	45	61%

Certifications and Listings

- cULus
- RoHS
- FCC
- DLC Premium

Installation

- Luminaire lays in standard 15/16" and 9/16" T-grid ceilings.

Ordering Guide

VOLUME	5A	S	/ XX	UNX	D	8	XX	/ XX	U	/ WH	–
Product Name VOLUME = Volumetric Troffer	Generation 5A = Generation 5A	Lumen Selectable S = Lumen Selectable	Wattage 30 = 20, 25, or 30W 34 = 25, 30, or 34W 45 = 34, 38, or 45W	Voltage UNV = 120-277V	Dimming D = 0-10V	CRI 8 = >80	Color Temp 35 = 3500K 40 = 4000K 50 = 5000K	Size 14 = 1x4 ft 22 = 2x2 ft 24 = 2x4 ft	Mounting U = Universal Mounting	Color/Finish WH = White	Options Blank = no option E = Emergency Battery Back-up

Ordering Information

Item Number	Ordering Abbreviation	Wattage (W)	Input Voltage (V)	Dimming	CRI	Color Temperature (CCT)	Total Fixture Lumens	LPW	DLC	Options
61512	VOLUME5AS/030UNVD835/22U/WH	20, 25 or 30	120-277	0-10V	>80	3500K	2500, 3125 or 3750	125	Prm	–
61513	VOLUME5AS/030UNVD840/22U/WH	20, 25 or 30	120-277	0-10V	>80	4000K	2500, 3125 or 3750	125	Prm	–
61514	VOLUME5AS/030UNVD850/22U/WH	20, 25 or 30	120-277	0-10V	>80	5000K	2500, 3125 or 3750	125	Prm	–
61515	VOLUME5AS/034UNVD835/24U/WH	25, 30 or 34	120-277	0-10V	>80	3500K	3100, 3750 or 4250	125	Prm	–
61516	VOLUME5AS/034UNVD840/24U/WH	25, 30 or 34	120-277	0-10V	>80	4000K	3100, 3750 or 4250	125	Prm	–
61517	VOLUME5AS/034UNVD850/24U/WH	25, 30 or 34	120-277	0-10V	>80	5000K	3100, 3750 or 4250	125	Prm	–
61518	VOLUME5AS/045UNVD835/24U/WH	34, 38 or 45	120-277	0-10V	>80	3500K	4250, 4750 or 5600	125	Prm	–
61519	VOLUME5AS/045UNVD840/24U/WH	34, 38 or 45	120-277	0-10V	>80	4000K	4250, 4750 or 5600	125	Prm	–
61520	VOLUME5AS/045UNVD850/24U/WH	34, 38 or 45	120-277	0-10V	>80	5000K	4250, 4750 or 5600	125	Prm	–
61521	VOLUME5AS/030UNVD835/14U/WH	20, 25 or 30	120-277	0-10V	>80	3500K	2500, 3125 or 3750	125	Prm	–
61522	VOLUME5AS/030UNVD840/14U/WH	20, 25 or 30	120-277	0-10V	>80	4000K	2500, 3125 or 3750	125	Prm	–
61523	VOLUME5AS/030UNVD850/14U/WH	20, 25 or 30	120-277	0-10V	>80	5000K	2500, 3125 or 3750	125	Prm	–
61684	VOLUME5AS/030UNVD835/22U/WH/E	20, 25 or 30	120-277	0-10V	>80	3500K	2500, 3125 or 3750	125	Prm	Emergency Battery Back-Up
61685	VOLUME5AS/030UNVD840/22U/WH/E	20, 25 or 30	120-277	0-10V	>80	4000K	2500, 3125 or 3750	125	Prm	Emergency Battery Back-Up
61686	VOLUME5AS/030UNVD850/22U/WH/E	20, 25 or 30	120-277	0-10V	>80	5000K	2500, 3125 or 3750	125	Prm	Emergency Battery Back-Up
61687	VOLUME5AS/034UNVD835/24U/WH/E	25, 30 or 34	120-277	0-10V	>80	3500K	3100, 3750 or 4250	125	Prm	Emergency Battery Back-Up
61688	VOLUME5AS/034UNVD840/24U/WH/E	25, 30 or 34	120-277	0-10V	>80	4000K	3100, 3750 or 4250	125	Prm	Emergency Battery Back-Up
61689	VOLUME5AS/034UNVD850/24U/WH/E	25, 30 or 34	120-277	0-10V	>80	5000K	3100, 3750 or 4250	125	Prm	Emergency Battery Back-Up
61690	VOLUME5AS/045UNVD835/24U/WH/E	34, 38 or 45	120-277	0-10V	>80	3500K	4250, 4750 or 5600	125	Prm	Emergency Battery Back-Up
61691	VOLUME5AS/045UNVD840/24U/WH/E	34, 38 or 45	120-277	0-10V	>80	4000K	4250, 4750 or 5600	125	Prm	Emergency Battery Back-Up
61692	VOLUME5AS/045UNVD850/24U/WH/E	34, 38 or 45	120-277	0-10V	>80	5000K	4250, 4750 or 5600	125	Prm	Emergency Battery Back-Up
61693	VOLUME5AS/030UNVD835/14U/WH/E	20, 25 or 30	120-277	0-10V	>80	3500K	2500, 3125 or 3750	125	Prm	Emergency Battery Back-Up
61694	VOLUME5AS/030UNVD840/14U/WH/E	20, 25 or 30	120-277	0-10V	>80	4000K	2500, 3125 or 3750	125	Prm	Emergency Battery Back-Up
61695	VOLUME5AS/030UNVD850/14U/WH/E	20, 25 or 30	120-277	0-10V	>80	5000K	2500, 3125 or 3750	125	Prm	Emergency Battery Back-Up

Photometric Data

		8 ft Mounting Height			10 ft Mounting Height			12 ft Mounting Height		
		On Center Luminaire Spacing								
		8'x10'	10'x10'	10'x12'	8'x10'	10'x10'	10'x12'	8'x10'	10'x10'	10'x12'
1'x4' 30W	VOLUME5A/030UNVD835/14G/WH VOLUME5A/030UNVD840/14G/WH VOLUME5A/030UNVD850/14G/WH VOLUME5A/030UNVD835/14G/WH/E VOLUME5A/030UNVD840/14G/WH/E VOLUME5A/030UNVD850/14G/WH/E	47.6/1.5	40.0/1.3	35.7/1.5	46.4/1.6	39.2/1.4	34.5/1.3	44.3/1.7	37.8/1.5	33.1/1.3
2'x2' 30W	VOLUME5A/030UNVD835/22G/WH VOLUME5A/030UNVD840/22G/WH VOLUME5A/030UNVD850/22G/WH VOLUME5A/030UNVD835/22G/WH/E VOLUME5A/030UNVD840/22G/WH/E VOLUME5A/030UNVD850/22G/WH/E	43.4/1.5	36.6/1.3	32.5/1.5	42.3/1.5	35.7/1.4	31.4/1.3	40.3/1.6	34.3/1.5	30.0/1.3
2'x4' 34W	VOLUME5A/034UNVD835/24G/WH VOLUME5A/034UNVD840/24G/WH VOLUME5A/034UNVD850/24G/WH VOLUME5A/034UNVD835/24G/WH/E VOLUME5A/034UNVD840/24G/WH/E VOLUME5A/034UNVD850/24G/WH/E	51.3/1.5	43.3/1.3	38.4/1.5	50.1/1.5	42.1/1.4	37.1/1.3	47.5/1.6	40.5/1.5	35.4/1.3
2'x4' 45W	VOLUME5A/045UNVD835/24G/WH VOLUME5A/045UNVD840/24G/WH VOLUME5A/045UNVD850/24G/WH VOLUME5A/045UNVD835/24G/WH/E VOLUME5A/045UNVD840/24G/WH/E VOLUME5A/045UNVD850/24G/WH/E	70.7/1.4	59.2/1.3	53.1/1.6	68.8/1.5	58.1/1.4	51.0/1.3	65.4/1.6	55.7/1.5	48.8/1.3

Physical Information

Luminaire Description	Length	Width	Height
1x4	47.75 (1213mm)	11.9" (302mm)	2.75" (70mm)
2x2	23.77" (604mm)	23.77" (604mm)	2.75" (70mm)
2x4	47.75" (1213mm)	23.77" (604mm)	2.75" (70mm)

1x4

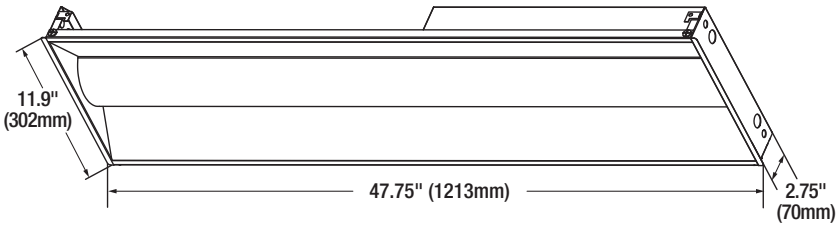

2x2

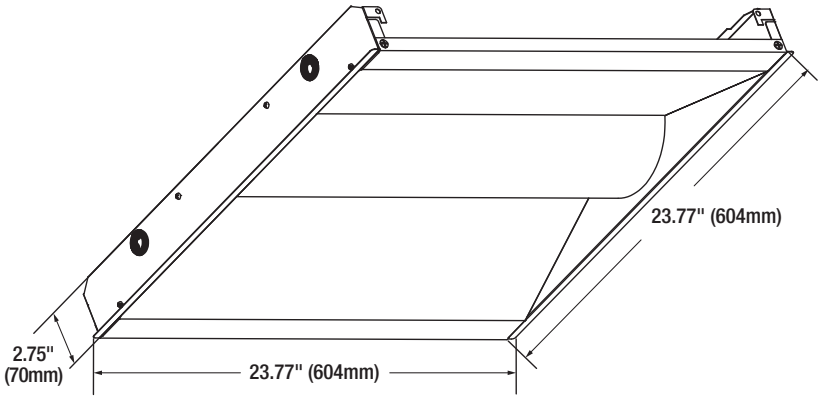

2x4

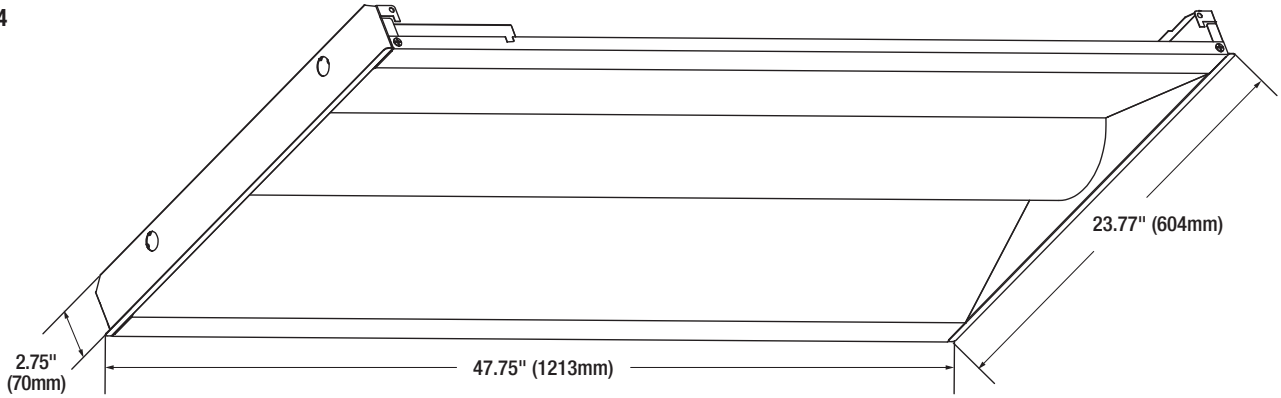

Accessories

Item Number	Ordering Abbreviation	Item Description
60457	FK1A/14G/WH	1x4 Flange Kit, White Finish
60458	FK1A/22G/WH	2x2 Flange Kit, White Finish
60459	FK1A/24G/WH	2x4 Flange Kit, White Finish

LEDVANCE LLC
200 Ballardvale Street
Wilmington, MA 01887 USA
Phone 1-800-LIGHTBULB (1-800-544-4828)
www.sylvania.com

SYLVANIA and LEDVANCE are registered trademarks.
All other trademarks are those of their respective owners.
Licensee of product trademark SYLVANIA in general lighting.
Specifications subject to change without notice.

/sylvania /sylvania

Name:

Email:

Phone:

© 2020 LEDVANCE LLC

SYLVANIA Luminaires

UltraLED™ Retrofit Door Kit

Item #	
Type	
Project	
Notes	
Date	

Application

Ideal for illuminating office, retail, hospitality, or general purpose areas.

Benefits and Features

- Up to 130 LPW
- 3500K, 4000K and 5000K color temperature
- CRI >80
- Offered in 18, 23 and 33 watts
- Energy savings up to 60%

Electrical

- The luminaire is designed to operate through the 120-277 VAC (UNV) or 120-347VAC (UNH) (see Ordering Guide for further information)
- The power factor is ≥90%
- THD is ≤20%
- 0-10V dimmable

Rated Life

- >100,000 hours (L_{70})

Warranty

- 5-year

Ambient Operating Range

- -4°F to +104°F (-20°C to +40°C)

Certifications and Listings

- cULus listed for damp applications
- RoHS
- FCC
- DLC Premium

Installation

- Intended for installation in existing troffers

Wattage Comparison

Traditional Source	Traditional System Wattage	LED System Wattage	Energy Savings
3 x 17W T8	48	23	52%
2 x U31 T8	56	23	59%
3 x 28W T8	73	33	55%
3 x 32W T8	83	33	60%

Ordering Guide

RDORKIT	3A	/	XX	UNV	D	8	XX	/	XX	U	/	WH	/	—
Product Name	Generation		Wattage	Voltage	Dimming	CRI	Color Temp		Dimensions	Mounting		Color/Finish		Options
RDORKIT	3A		18 = 18 Watts	UNV = 120-277V	D = 0-10V	8 = >80	35 = 3500K		22 = 2x2	U = Universal		WH = white		blank = no option
			23 = 23 Watts	UNH = 120-347V	Dimming		40 = 4000K		24 = 2x4	Mounting				E = Emergency Battery Back-up
			33 = 33 Watts				50 = 5000K							D = Daylight and motion sensor

Ordering Information

Item Number	Ordering Abbreviation	Wattage	Nominal Voltage	Dimming	CRI	Color Temp	Dimensions	Total Fixture Lumens	LPW	DLC	MTO*	Options
Lower-Wattage Versions												
61055	RDORKIT3A/018UNVD835/22U/WH	18	120-277	0-10V	>80	3500K	2x2	2400	125	Prm	MTO	–
61056	RDORKIT3A/018UNVD840/22U/WH	18	120-277	0-10V	>80	4000K	2x2	2400	125	Prm	MTO	–
61057	RDORKIT3A/018UNVD850/22U/WH	18	120-277	0-10V	>80	5000K	2x2	2400	125	Prm	MTO	–
61058	RDORKIT3A/023UNVD835/24U/WH	23	120-277	0-10V	>80	3500K	2x4	3000	126	Prm	MTO	–
61059	RDORKIT3A/023UNVD840/24U/WH	23	120-277	0-10V	>80	4000K	2x4	3000	126	Prm	MTO	–
61060	RDORKIT3A/023UNVD850/24U/WH	23	120-277	0-10V	>80	5000K	2x4	3000	126	Prm	MTO	–
61414	RDORKIT3A/018UNVD835/22U/WH/D	18	120-277	0-10V	>80	3500K	2x2	2400	125	Prm	MTO	Daylight and motion sensor
61415	RDORKIT3A/018UNVD840/22U/WH/D	18	120-277	0-10V	>80	4000K	2x2	2400	125	Prm	MTO	Daylight and motion sensor
61416	RDORKIT3A/018UNVD850/22U/WH/D	18	120-277	0-10V	>80	5000K	2x2	2400	125	Prm	MTO	Daylight and motion sensor
61417	RDORKIT3A/023UNVD835/24U/WH/D	23	120-277	0-10V	>80	3500K	2x4	3000	126	Prm	MTO	Daylight and motion sensor
61418	RDORKIT3A/023UNVD840/24U/WH/D	23	120-277	0-10V	>80	4000K	2x4	3000	126	Prm	MTO	Daylight and motion sensor
61419	RDORKIT3A/023UNVD850/24U/WH/D	23	120-277	0-10V	>80	5000K	2x4	3000	126	Prm	MTO	Daylight and motion sensor
61420	RDORKIT3A/018UNVD835/22U/WH/E	18	120-277	0-10V	>80	3500K	2x2	2400	125	Prm	MTO	Emergency Battery Back-up
61421	RDORKIT3A/018UNVD840/22U/WH/E	18	120-277	0-10V	>80	4000K	2x2	2400	125	Prm	MTO	Emergency Battery Back-up
61422	RDORKIT3A/018UNVD850/22U/WH/E	18	120-277	0-10V	>80	5000K	2x2	2400	125	Prm	MTO	Emergency Battery Back-up
61423	RDORKIT3A/023UNVD835/24U/WH/E	23	120-277	0-10V	>80	3500K	2x4	3000	126	Prm	MTO	Emergency Battery Back-up
61424	RDORKIT3A/023UNVD840/24U/WH/E	23	120-277	0-10V	>80	4000K	2x4	3000	126	Prm	MTO	Emergency Battery Back-up
61425	RDORKIT3A/023UNVD850/24U/WH/E	23	120-277	0-10V	>80	5000K	2x4	3000	126	Prm	MTO	Emergency Battery Back-up
60616	RDORKIT3A/023UNVD835/22U/WH	23	120-277	0-10V	>80	3500K	2x2	2900	126	Prm	–	–
60617	RDORKIT3A/023UNVD840/22U/WH	23	120-277	0-10V	>80	4000K	2x2	2900	126	Prm	–	–
60618	RDORKIT3A/023UNVD850/22U/WH	23	120-277	0-10V	>80	5000K	2x2	2900	126	Prm	–	–
60619	RDORKIT3A/033UNVD835/24U/WH	33	120-277	0-10V	>80	3500K	2x4	4100	125	Prm	–	–
60620	RDORKIT3A/033UNVD840/24U/WH	33	120-277	0-10V	>80	4000K	2x4	4100	125	Prm	–	–
60621	RDORKIT3A/033UNVD850/24U/WH	33	120-277	0-10V	>80	5000K	2x4	4100	125	Prm	–	–
60807	RDORKIT3A/023UNVD835/22U/WH/E	23	120-277	0-10V	>80	3500K	2x2	2900	126	Prm	MTO	Emergency Battery Back-up
60808	RDORKIT3A/023UNVD840/22U/WH/E	23	120-277	0-10V	>80	4000K	2x2	2900	126	Prm	MTO	Emergency Battery Back-up
60809	RDORKIT3A/023UNVD850/22U/WH/E	23	120-277	0-10V	>80	5000K	2x2	2900	126	Prm	MTO	Emergency Battery Back-up
60810	RDORKIT3A/033UNVD835/24U/WH/E	33	120-277	0-10V	>80	3500K	2x4	4100	126	Prm	MTO	Emergency Battery Back-up
60811	RDORKIT3A/033UNVD840/24U/WH/E	33	120-277	0-10V	>80	4000K	2x4	4100	126	Prm	MTO	Emergency Battery Back-up
60812	RDORKIT3A/033UNVD850/24U/WH/E	33	120-277	0-10V	>80	5000K	2x4	4100	126	Prm	MTO	Emergency Battery Back-up
60981	RDORKIT3A/023UNHD835/22U/WH	23	120-347	0-10V	>80	3500K	2x2	2900	126	Prm	MTO	–
60982	RDORKIT3A/023UNHD840/22U/WH	23	120-347	0-10V	>80	4000K	2x2	2900	126	Prm	MTO	–
60983	RDORKIT3A/023UNHD850/22U/WH	23	120-347	0-10V	>80	5000K	2x2	2900	126	Prm	MTO	–
60984	RDORKIT3A/033UNHD835/24U/WH	33	120-347	0-10V	>80	3500K	2x4	4100	126	Prm	MTO	–
60985	RDORKIT3A/033UNHD840/24U/WH	33	120-347	0-10V	>80	4000K	2x4	4100	126	Prm	MTO	–
60986	RDORKIT3A/033UNHD850/24U/WH	33	120-347	0-10V	>80	5000K	2x4	4100	126	Prm	MTO	–
60987	RDORKIT3A/023UNVD835/22U/WH/D	23	120-277	0-10V	>80	3500K	2x2	2900	126	Prm	MTO	Daylight and motion sensor
60988	RDORKIT3A/023UNVD840/22U/WH/D	23	120-277	0-10V	>80	4000K	2x2	2900	126	Prm	MTO	Daylight and motion sensor
60989	RDORKIT3A/023UNVD850/22U/WH/D	23	120-277	0-10V	>80	5000K	2x2	2900	126	Prm	MTO	Daylight and motion sensor
60990	RDORKIT3A/033UNVD835/24U/WH/D	33	120-277	0-10V	>80	3500K	2x4	4100	126	Prm	MTO	Daylight and motion sensor
60991	RDORKIT3A/033UNVD840/24U/WH/D	33	120-277	0-10V	>80	4000K	2x4	4100	126	Prm	MTO	Daylight and motion sensor
60992	RDORKIT3A/033UNVD850/24U/WH/D	33	120-277	0-10V	>80	5000K	2x4	4100	126	Prm	MTO	Daylight and motion sensor

*Made To Order

Ordering Guide (with Partner Sensor Options)

RDORKIT	3A	/	XX	UNV	D	8	XX	/	XX	U	/	WH	/	XX
Product Name RDORKIT	Generation 3A		Wattage 18 = 18 Watts 23 = 23 Watts 33 = 33 Watts	Voltage UNV = 120-277V UNH = 120-347V	Dimming D = 0-10V Dimming	CRI 8 = >80	Color Temp 35 = 3500K 40 = 4000K 50 = 5000K		Dimensions 22 = 2x2 24 = 2x4	Mounting U = Universal Mounting		Color/Finish WH = white		Partner Sensor Options D = Daylight and motion sensor A1 = Enlighted Micro Sensor B1 = Enlighted Micro Sensor with Emergency Battery Back-up A2 = Lutron Vive Integral Fixture Control (RF only) B2 = Lutron Vive Integral Fixture Control (RF only) with Emergency Battery Back-up A3 =Lutron Vive Integral Fixture Control with Sensor B3 = Lutron Vive Integral Fixture Control with Sensor and Emergency Battery Back-up A4 = OSRAM SensiLUM B4 = OSRAM SensiLUM with Emergency Battery Back-up A5 = OSRAM ENCELIUM CLM B5 = OSRAM ENCELIUM CLM with Emergency Battery Back-up A6 = OSRAM ZigBee CLM B6 = OSRAM ZigBee CLM with Emergency Battery Back-up

Enlighted Micro Sensor

LUTRON Vive Sensor

OSRAM SensiLUM Sensor

enlighted™ A Siemens Company

LUTRON®

OSRAM SensiLUM™ Included

OSRAM CLM Included

Ordering Information (continued)

Item Number	Ordering Abbreviation	Wattage	Nominal Voltage	Dimming	CRI	Color Temp	Dimensions	Total Fixture Lumens	LPW	DLC	MTO*	Options
Partner Sensor Options												
61049	RDORKIT3A/023UNVD835/22U/WH/A1	23	120-277	0-10V	>80	3500K	2x2	2900	126	Prm	MTO	Enlighted Micro Sensor**
61050	RDORKIT3A/023UNVD840/22U/WH/A1	23	120-277	0-10V	>80	4000K	2x2	2900	126	Prm	MTO	Enlighted Micro Sensor**
61051	RDORKIT3A/023UNVD850/22U/WH/A1	23	120-277	0-10V	>80	5000K	2x2	2900	126	Prm	MTO	Enlighted Micro Sensor**
61052	RDORKIT3A/033UNVD835/24U/WH/A1	33	120-277	0-10V	>80	3500K	2x4	4100	126	Prm	MTO	Enlighted Micro Sensor**
61053	RDORKIT3A/033UNVD840/24U/WH/A1	33	120-277	0-10V	>80	4000K	2x4	4100	126	Prm	MTO	Enlighted Micro Sensor**
61054	RDORKIT3A/033UNVD850/24U/WH/A1	33	120-277	0-10V	>80	5000K	2x4	4100	126	Prm	MTO	Enlighted Micro Sensor**
60975	RDORKIT3A/023UNVD835/22U/WH/B1	23	120-277	0-10V	>80	3500K	2x2	2900	126	Prm	MTO	Enlighted Micro Sensor** with Emergency Battery Back-up
60976	RDORKIT3A/023UNVD840/22U/WH/B1	23	120-277	0-10V	>80	4000K	2x2	2900	126	Prm	MTO	Enlighted Micro Sensor** with Emergency Battery Back-up
60977	RDORKIT3A/023UNVD850/22U/WH/B1	23	120-277	0-10V	>80	5000K	2x2	2900	126	Prm	MTO	Enlighted Micro Sensor** with Emergency Battery Back-up
60978	RDORKIT3A/033UNVD835/24U/WH/B1	33	120-277	0-10V	>80	3500K	2x4	4100	126	Prm	MTO	Enlighted Micro Sensor** with Emergency Battery Back-up
60979	RDORKIT3A/033UNVD840/24U/WH/B1	33	120-277	0-10V	>80	4000K	2x4	4100	126	Prm	MTO	Enlighted Micro Sensor** with Emergency Battery Back-up
60980	RDORKIT3A/033UNVD850/24U/WH/B1	33	120-277	0-10V	>80	5000K	2x4	4100	126	Prm	MTO	Enlighted Micro Sensor** with Emergency Battery Back-up
60957	RDORKIT3A/023UNVD835/22U/WH/A2	23	120-277	0-10V	>80	3500K	2x2	2900	126	Prm	MTO	Lutron Vive Integral Fixture Control (RF only)
60958	RDORKIT3A/023UNVD840/22U/WH/A2	23	120-277	0-10V	>80	4000K	2x2	2900	126	Prm	MTO	Lutron Vive Integral Fixture Control (RF only)
60959	RDORKIT3A/023UNVD850/22U/WH/A2	23	120-277	0-10V	>80	5000K	2x2	2900	126	Prm	MTO	Lutron Vive Integral Fixture Control (RF only)
60960	RDORKIT3A/033UNVD835/24U/WH/A2	33	120-277	0-10V	>80	3500K	2x4	4100	126	Prm	MTO	Lutron Vive Integral Fixture Control (RF only)
60961	RDORKIT3A/033UNVD840/24U/WH/A2	33	120-277	0-10V	>80	4000K	2x4	4100	126	Prm	MTO	Lutron Vive Integral Fixture Control (RF only)
60962	RDORKIT3A/033UNVD850/24U/WH/A2	33	120-277	0-10V	>80	5000K	2x4	4100	126	Prm	MTO	Lutron Vive Integral Fixture Control (RF only)
60963	RDORKIT3A/023UNVD835/22U/WH/B2	23	120-277	0-10V	>80	3500K	2x2	2900	126	Prm	MTO	Lutron Vive Integral Fixture Control (RF only) with Emergency Battery Back-up
60964	RDORKIT3A/023UNVD840/22U/WH/B2	23	120-277	0-10V	>80	4000K	2x2	2900	126	Prm	MTO	Lutron Vive Integral Fixture Control (RF only) with Emergency Battery Back-up
60965	RDORKIT3A/023UNVD850/22U/WH/B2	23	120-277	0-10V	>80	5000K	2x2	2900	126	Prm	MTO	Lutron Vive Integral Fixture Control (RF only) with Emergency Battery Back-up

*Made To Order
**Default: Independent Lighting/One

Ordering Information (continued)

Item Number	Ordering Abbreviation	Wattage	Nominal Voltage	Dimming	CRI	Color Temp	Dimensions	Total Fixture Lumens	LPW	DLC	MTO*	Options
60966	RDORKIT3A/033UNVD835/24U/WH/B2	33	120-277	0-10V	>80	3500K	2x4	4100	126	Prm	MTO	Lutron Vive Integral Fixture Control (RF only) with Emergency Battery Back-up
60967	RDORKIT3A/033UNVD840/24U/WH/B2	33	120-277	0-10V	>80	4000K	2x4	4100	126	Prm	MTO	Lutron Vive Integral Fixture Control (RF only) with Emergency Battery Back-up
60968	RDORKIT3A/033UNVD850/24U/WH/B2	33	120-277	0-10V	>80	5000K	2x4	4100	126	Prm	MTO	Lutron Vive Integral Fixture Control (RF only) with Emergency Battery Back-up
60999	RDORKIT3A/023UNVD835/22U/WH/A3	23	120-277	0-10V	>80	3500K	2x2	2900	126	Prm	MTO	Lutron Vive Integral Fixture Control with Sensor
61000	RDORKIT3A/023UNVD840/22U/WH/A3	23	120-277	0-10V	>80	4000K	2x2	2900	126	Prm	MTO	Lutron Vive Integral Fixture Control with Sensor
61001	RDORKIT3A/023UNVD850/22U/WH/A3	23	120-277	0-10V	>80	5000K	2x2	2900	126	Prm	MTO	Lutron Vive Integral Fixture Control with Sensor
61002	RDORKIT3A/033UNVD835/24U/WH/A3	33	120-277	0-10V	>80	3500K	2x4	4100	126	Prm	MTO	Lutron Vive Integral Fixture Control with Sensor
61003	RDORKIT3A/033UNVD840/24U/WH/A3	33	120-277	0-10V	>80	4000K	2x4	4100	126	Prm	MTO	Lutron Vive Integral Fixture Control with Sensor
61004	RDORKIT3A/033UNVD850/24U/WH/A3	33	120-277	0-10V	>80	5000K	2x4	4100	126	Prm	MTO	Lutron Vive Integral Fixture Control with Sensor
61035	RDORKIT3A/023UNVD835/22U/WH/B3	23	120-277	0-10V	>80	3500K	2x2	2900	126	Prm	MTO	Lutron Vive Integral Fixture Control with Sensor and Emergency Battery Back-up
61036	RDORKIT3A/023UNVD840/22U/WH/B3	23	120-277	0-10V	>80	4000K	2x2	2900	126	Prm	MTO	Lutron Vive Integral Fixture Control with Sensor and Emergency Battery Back-up
61037	RDORKIT3A/023UNVD850/22U/WH/B3	23	120-277	0-10V	>80	5000K	2x2	2900	126	Prm	MTO	Lutron Vive Integral Fixture Control with Sensor and Emergency Battery Back-up
61038	RDORKIT3A/033UNVD835/24U/WH/B3	33	120-277	0-10V	>80	3500K	2x4	4100	126	Prm	MTO	Lutron Vive Integral Fixture Control with Sensor and Emergency Battery Back-up
61039	RDORKIT3A/033UNVD840/24U/WH/B3	33	120-277	0-10V	>80	4000K	2x4	4100	126	Prm	MTO	Lutron Vive Integral Fixture Control with Sensor and Emergency Battery Back-up
61040	RDORKIT3A/033UNVD850/24U/WH/B3	33	120-277	0-10V	>80	5000K	2x4	4100	126	Prm	MTO	Lutron Vive Integral Fixture Control with Sensor and Emergency Battery Back-up
61017	RDORKIT3A/023UNVD835/22U/WH/A4	23	120-277	0-10V	>80	3500K	2x2	2900	126	Prm	MTO	OSRAM SensiLUM
61018	RDORKIT3A/023UNVD840/22U/WH/A4	23	120-277	0-10V	>80	4000K	2x2	2900	126	Prm	MTO	OSRAM SensiLUM
61019	RDORKIT3A/023UNVD850/22U/WH/A4	23	120-277	0-10V	>80	5000K	2x2	2900	126	Prm	MTO	OSRAM SensiLUM
61020	RDORKIT3A/033UNVD835/24U/WH/A4	33	120-277	0-10V	>80	3500K	2x4	4100	126	Prm	MTO	OSRAM SensiLUM
61021	RDORKIT3A/033UNVD840/24U/WH/A4	33	120-277	0-10V	>80	4000K	2x4	4100	126	Prm	MTO	OSRAM SensiLUM
61022	RDORKIT3A/033UNVD850/24U/WH/A4	33	120-277	0-10V	>80	5000K	2x4	4100	126	Prm	MTO	OSRAM SensiLUM
61029	RDORKIT3A/023UNVD835/22U/WH/B4	23	120-277	0-10V	>80	3500K	2x2	2900	126	Prm	MTO	OSRAM SensiLUM with Emergency Battery Back-up
61030	RDORKIT3A/023UNVD840/22U/WH/B4	23	120-277	0-10V	>80	4000K	2x2	2900	126	Prm	MTO	OSRAM SensiLUM with Emergency Battery Back-up
61031	RDORKIT3A/023UNVD850/22U/WH/B4	23	120-277	0-10V	>80	5000K	2x2	2900	126	Prm	MTO	OSRAM SensiLUM with Emergency Battery Back-up
61032	RDORKIT3A/033UNVD835/24U/WH/B4	33	120-277	0-10V	>80	3500K	2x4	4100	126	Prm	MTO	OSRAM SensiLUM with Emergency Battery Back-up
61033	RDORKIT3A/033UNVD840/24U/WH/B4	33	120-277	0-10V	>80	4000K	2x4	4100	126	Prm	MTO	OSRAM SensiLUM with Emergency Battery Back-up
61034	RDORKIT3A/033UNVD850/24U/WH/B4	33	120-277	0-10V	>80	5000K	2x4	4100	126	Prm	MTO	OSRAM SensiLUM with Emergency Battery Back-up
61005	RDORKIT3A/023UNVD835/22U/WH/A5	23	120-277	0-10V	>80	3500K	2x2	2900	126	Prm	MTO	OSRAM ENCELIUM CLM
61006	RDORKIT3A/023UNVD840/22U/WH/A5	23	120-277	0-10V	>80	4000K	2x2	2900	126	Prm	MTO	OSRAM ENCELIUM CLM
61007	RDORKIT3A/023UNVD850/22U/WH/A5	23	120-277	0-10V	>80	5000K	2x2	2900	126	Prm	MTO	OSRAM ENCELIUM CLM
61008	RDORKIT3A/033UNVD835/24U/WH/A5	33	120-277	0-10V	>80	3500K	2x4	4100	126	Prm	MTO	OSRAM ENCELIUM CLM
61009	RDORKIT3A/033UNVD840/24U/WH/A5	33	120-277	0-10V	>80	4000K	2x4	4100	126	Prm	MTO	OSRAM ENCELIUM CLM
61010	RDORKIT3A/033UNVD850/24U/WH/A5	33	120-277	0-10V	>80	5000K	2x4	4100	126	Prm	MTO	OSRAM ENCELIUM CLM
61011	RDORKIT3A/023UNVD835/22U/WH/B5	23	120-277	0-10V	>80	3500K	2x2	2900	126	Prm	MTO	OSRAM ENCELIUM CLM with Emergency Battery Back-up
61012	RDORKIT3A/023UNVD840/22U/WH/B5	23	120-277	0-10V	>80	4000K	2x2	2900	126	Prm	MTO	OSRAM ENCELIUM CLM with Emergency Battery Back-up
61013	RDORKIT3A/023UNVD850/22U/WH/B5	23	120-277	0-10V	>80	5000K	2x2	2900	126	Prm	MTO	OSRAM ENCELIUM CLM with Emergency Battery Back-up

*Made To Order

Ordering Information (continued)

Item Number	Ordering Abbreviation	Wattage	Nominal Voltage	Dimming	CRI	Color Temp	Dimensions	Total Fixture Lumens	LPW	DLC	MTO*	Options
61014	RDORKIT3A/033UNVD835/24U/WH/B5	33	120-277	0-10V	>80	3500K	2x4	4100	126	Prm	MTO	OSRAM ENCELIUM CLM with Emergency Battery Back-up
61015	RDORKIT3A/033UNVD840/24U/WH/B5	33	120-277	0-10V	>80	4000K	2x4	4100	126	Prm	MTO	OSRAM ENCELIUM CLM with Emergency Battery Back-up
61016	RDORKIT3A/033UNVD850/24U/WH/B5	33	120-277	0-10V	>80	5000K	2x4	4100	126	Prm	MTO	OSRAM ENCELIUM CLM with Emergency Battery Back-up
61023	RDORKIT3A/023UNVD835/22U/WH/A6	23	120-277	0-10V	>80	3500K	2x2	2900	126	Prm	MTO	OSRAM ZigBee CLM
61024	RDORKIT3A/023UNVD840/22U/WH/A6	23	120-277	0-10V	>80	4000K	2x2	2900	126	Prm	MTO	OSRAM ZigBee CLM
61025	RDORKIT3A/023UNVD850/22U/WH/A6	23	120-277	0-10V	>80	5000K	2x2	2900	126	Prm	MTO	OSRAM ZigBee CLM
61026	RDORKIT3A/033UNVD835/24U/WH/A6	33	120-277	0-10V	>80	3500K	2x4	4100	126	Prm	MTO	OSRAM ZigBee CLM
61027	RDORKIT3A/033UNVD840/24U/WH/A6	33	120-277	0-10V	>80	4000K	2x4	4100	126	Prm	MTO	OSRAM ZigBee CLM
61028	RDORKIT3A/033UNVD850/24U/WH/A6	33	120-277	0-10V	>80	5000K	2x4	4100	126	Prm	MTO	OSRAM ZigBee CLM
60993	RDORKIT3A/023UNVD835/22U/WH/B6	23	120-277	0-10V	>80	3500K	2x2	2900	126	Prm	MTO	OSRAM ZigBee CLM with Emergency Battery Back-up
60994	RDORKIT3A/023UNVD840/22U/WH/B6	23	120-277	0-10V	>80	4000K	2x2	2900	126	Prm	MTO	OSRAM ZigBee CLM with Emergency Battery Back-up
60995	RDORKIT3A/023UNVD850/22U/WH/B6	23	120-277	0-10V	>80	5000K	2x2	2900	126	Prm	MTO	OSRAM ZigBee CLM with Emergency Battery Back-up
60996	RDORKIT3A/033UNVD835/24U/WH/B6	33	120-277	0-10V	>80	3500K	2x4	4100	126	Prm	MTO	OSRAM ZigBee CLM with Emergency Battery Back-up
60997	RDORKIT3A/033UNVD840/24U/WH/B6	33	120-277	0-10V	>80	4000K	2x4	4100	126	Prm	MTO	OSRAM ZigBee CLM with Emergency Battery Back-up
60998	RDORKIT3A/033UNVD850/24U/WH/B6	33	120-277	0-10V	>80	5000K	2x4	4100	126	Prm	MTO	OSRAM ZigBee CLM with Emergency Battery Back-up

*Made To Order

Photometrics

Average Illuminance (FC) at 30" AFF and avg/min uniformity
80/50/20 Reflectances
Calculations are based on 110ft x 50ft area

			8 ft Mounting Height			10 ft Mounting Height			12 ft Mounting Height		
			On Center Fixture Spacing								
			8'x10'	10'x10'	10'x12'	8'x10'	10'x10'	10'x12'	8'x10'	10'x10'	10'x12'
2'x2'	23W	RDORKIT3A/023UNVD835/22U/WH	36fc/1.5	30fc/1.3	25fc/1.9	35fc/1.5	29fc/1.4	24fc/1.7	34fc/1.6	28fc/1.5	23fc/1.7
		RDORKIT3A/023UNVD840/22U/WH	36fc/1.5	30fc/1.3	25fc/1.9	35fc/1.5	29fc/1.4	24fc/1.7	34fc/1.6	28fc/1.5	23fc/1.7
		RDORKIT3A/023UNVD850/22U/WH	36fc/1.5	30fc/1.3	25fc/1.9	35fc/1.5	29fc/1.4	24fc/1.7	34fc/1.6	28fc/1.5	24fc/1.7
2'x4'	33W	RDORKIT3A/033UNVD835/24U/WH	50fc/1.5	41fc/1.3	35fc/1.9	48fc/1.6	40fc/1.4	34fc/1.7	46fc/1.6	39fc/1.5	32fc/1.7
		RDORKIT3A/033UNVD840/24U/WH	50fc/1.5	42fc/1.3	35fc/1.9	49fc/1.6	41fc/1.4	34fc/1.7	47fc/1.6	39fc/1.5	33fc/1.7
		RDORKIT3A/033UNVD850/24U/WH	50fc/1.5	42fc/1.3	35fc/1.9	49fc/1.6	41fc/1.4	34fc/1.7	47fc/1.6	39fc/1.5	33fc/1.7

Physical Information

Luminaire Description	(A) Length (in.)	(B) Width (in.)	(C) Height (in.)
2x2	23.8	23.9	2.4
2x4	47.8	23.9	2.4

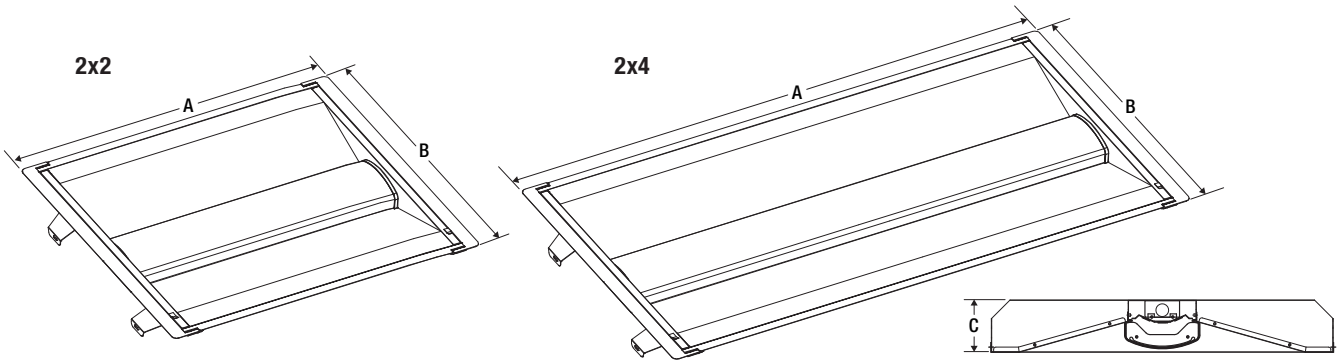

LEDVANCE LLC
200 Ballardvale Street
Wilmington, MA 01887 USA
Phone 1-800-LIGHTBULB (1-800-544-4828)
www.sylvania.com

SYLVANIA and LEDVANCE are registered trademarks.
All other trademarks are those of their respective owners.
Licensee of product trademark SYLVANIA in general lighting.
Specifications subject to change without notice.

/sylvania /sylvania

Name:
Email:
Phone:

© 2019 LEDVANCE LLC

SYLVANIA Luminaires

ValueLED™ Lumen Selectable Retrofit Doorkit

Item #	
Type	
Project	
Notes	
Date	

Application

The ValueLED Retrofit Doorkit is offered in three sizes (1'x4', 2'x2', and 2'x4') and is ideal for illuminating offices, retail spaces, hallways, multipurpose rooms and hospitality areas.

Benefits and Features

- Lumen selectability increases the versatility of this product
- All models are DLC Premium listed to maximize rebate opportunities
- Ideal in retrofit applications, offering up to 61% energy savings when compared to traditional lighting technologies
- Additional energy savings can be obtained by taking advantage of the standard 0-10V dimming driver
- Up to 125 LPW
- 3500K, 4000K or 5000K color temperature
- 0-10V Dimmable
- CRI >80

Electrical

- 120-277VAC
- THD <20%
- Power Factor >90%

Rated Life

- 50,000 hours (L_{70}) @25°C

Warranty

- 5-year

Ambient Operating Range

- -4°F to +120°F (-20°C to +50°C)
- 32°F to +120°F (0°C to +50°C) (Emergency Versions)

Wattage Comparison

Traditional Source	Traditional System Wattage	LED System Wattage	Energy Savings
2x28W T8	49	20	59%
2x32W T8	56	25	55%
3x28W T8	64	30	53%
3x32W T8	75	34	55%
4x28W T8	97	38	61%
4x32W T8	116	45	61%

Certifications and Listings

- cULus
- RoHS
- FCC
- DLC Premium

Installation

- Retrofit luminaire is designed to be installed in existing troffers

Ordering Guide

RDORKIT	5A	S	/ XX	UNX	D	8	XX	/ XX	U	/ WH	–
Product Name	Generation	Lumen Selectable	Wattage	Voltage	Dimming	CRI	Color Temp	Size	Mounting	Color/Finish	Options
RDORKIT = Retrofit Doorkit	5A = Generation 5A	S = Lumen Selectable	30 = 20, 25, or 30W 34 = 25, 30, or 34W 45 = 34, 38, or 45W	UNV = 120-277V	D = 0-10V	8 = >80	35 = 3500K 40 = 4000K 50 = 5000K	14 = 1x4 ft 22 = 2x2 ft 24 = 2x4 ft	U = Universal Mounting	WH = White	Blank = no option E = Emergency Battery Back-up

Ordering Information

Item Number	Ordering Abbreviation	Wattage (W)	Input Voltage (V)	Dimming	CRI	Color Temperature (CCT)	Total Fixture Lumens	LPW	DLC	Options
61525	RDORKIT5AS/030UNVD835/22U/WH	20, 25 or 30	120-277	0-10V	>80	3500K	2500, 3125 or 3750	125	Prm	–
61526	RDORKIT5AS/030UNVD840/22U/WH	20, 25 or 30	120-277	0-10V	>80	4000K	2500, 3125 or 3750	125	Prm	–
61527	RDORKIT5AS/030UNVD850/22U/WH	20, 25 or 30	120-277	0-10V	>80	5000K	2500, 3125 or 3750	125	Prm	–
61528	RDORKIT5AS/034UNVD835/24U/WH	25, 30 or 34	120-277	0-10V	>80	3500K	3100, 3750 or 4250	125	Prm	–
61529	RDORKIT5AS/034UNVD840/24U/WH	25, 30 or 34	120-277	0-10V	>80	4000K	3100, 3750 or 4250	125	Prm	–
61530	RDORKIT5AS/034UNVD850/24U/WH	25, 30 or 34	120-277	0-10V	>80	5000K	3100, 3750 or 4250	125	Prm	–
61531	RDORKIT5AS/045UNVD835/24U/WH	34, 38 or 45	120-277	0-10V	>80	3500K	4250, 4750 or 5600	125	Prm	–
61532	RDORKIT5AS/045UNVD840/24U/WH	34, 38 or 45	120-277	0-10V	>80	4000K	4250, 4750 or 5600	125	Prm	–
61533	RDORKIT5AS/045UNVD850/24U/WH	34, 38 or 45	120-277	0-10V	>80	5000K	4250, 4750 or 5600	125	Prm	–
61534	RDORKIT5AS/030UNVD835/14U/WH	20, 25 or 30	120-277	0-10V	>80	3500K	2500, 3125 or 3750	125	Prm	–
61535	RDORKIT5AS/030UNVD840/14U/WH	20, 25 or 30	120-277	0-10V	>80	4000K	2500, 3125 or 3750	125	Prm	–
61536	RDORKIT5AS/030UNVD850/14U/WH	20, 25 or 30	120-277	0-10V	>80	5000K	2500, 3125 or 3750	125	Prm	–
61696	RDORKIT5AS/030UNVD835/22U/WH/E	20, 25 or 30	120-277	0-10V	>80	3500K	2500, 3125 or 3750	125	Prm	Emergency Battery Back-Up
61697	RDORKIT5AS/030UNVD840/22U/WH/E	20, 25 or 30	120-277	0-10V	>80	4000K	2500, 3125 or 3750	125	Prm	Emergency Battery Back-Up
61698	RDORKIT5AS/030UNVD85/022U/WH/E	20, 25 or 30	120-277	0-10V	>80	5000K	2500, 3125 or 3750	125	Prm	Emergency Battery Back-Up
61699	RDORKIT5AS/034UNVD835/24U/WH/E	25, 30 or 34	120-277	0-10V	>80	3500K	3100, 3750 or 4250	125	Prm	Emergency Battery Back-Up
61700	RDORKIT5AS/034UNVD840/24U/WH/E	25, 30 or 34	120-277	0-10V	>80	4000K	3100, 3750 or 4250	125	Prm	Emergency Battery Back-Up
61701	RDORKIT5AS/034UNVD850/24U/WH/E	25, 30 or 34	120-277	0-10V	>80	5000K	3100, 3750 or 4250	125	Prm	Emergency Battery Back-Up
61702	RDORKIT5AS/045UNVD835/24U/WH/E	34, 38 or 45	120-277	0-10V	>80	3500K	4250, 4750 or 5600	125	Prm	Emergency Battery Back-Up
61703	RDORKIT5AS/045UNVD840/24U/WH/E	34, 38 or 45	120-277	0-10V	>80	4000K	4250, 4750 or 5600	125	Prm	Emergency Battery Back-Up
61704	RDORKIT5AS/045UNVD850/24U/WH/E	34, 38 or 45	120-277	0-10V	>80	5000K	4250, 4750 or 5600	125	Prm	Emergency Battery Back-Up
61705	RDORKIT5AS/030UNVD835/14U/WH/E	20, 25 or 30	120-277	0-10V	>80	3500K	2500, 3125 or 3750	125	Prm	Emergency Battery Back-Up
61706	RDORKIT5AS/030UNVD840/14U/WH/E	20, 25 or 30	120-277	0-10V	>80	4000K	2500, 3125 or 3750	125	Prm	Emergency Battery Back-Up
61707	RDORKIT5AS/030UNVD850/14U/WH/E	20, 25 or 30	120-277	0-10V	>80	5000K	2500, 3125 or 3750	125	Prm	Emergency Battery Back-Up

Photometric Data

		8 ft Mounting Height			10 ft Mounting Height			12 ft Mounting Height		
		On Center Luminaire Spacing								
		8'x10'	10'x10'	10'x12'	8'x10'	10'x10'	10'x12'	8'x10'	10'x10'	10'x12'
1'x4' 30W	RDORKIT5A/030UNVD835/14G/WH	46.2/1.5	38.5/1.3	34.7/1.7	45.0/1.6	37.6/1.4	33.4/1.4	43.4/1.6	36.5/1.5	32.1/1.3
	RDORKIT5A/030UNVD840/14G/WH									
	RDORKIT5A/030UNVD850/14G/WH									
	RDORKIT5A/030UNVD835/14G/WH/E									
	RDORKIT5A/030UNVD840/14G/WH/E									
	RDORKIT5A/030UNVD850/14G/WH/E									
2'x2' 30W	RDORKIT5A/030UNVD835/22G/WH	44.9/1.5	37.8/1.3	33.5/1.5	43.7/1.5	36.8/1.4	32.4/1.3	42.1/1.6	35.4/1.5	31.0/1.3
	RDORKIT5A/030UNVD840/22G/WH									
	RDORKIT5A/030UNVD850/22G/WH									
	RDORKIT5A/030UNVD835/22G/WH/E									
	RDORKIT5A/030UNVD840/22G/WH/E									
	RDORKIT5A/030UNVD850/22G/WH/E									
2'x4' 34W	RDORKIT5A/034UNVD835/24G/WH	51.8/1.5	43.6/1.3	38.7/1.5	50.5/1.5	42.5/1.4	37.4/1.3	48.6/1.6	40.8/1.5	35.7/1.3
	RDORKIT5A/034UNVD840/24G/WH									
	RDORKIT5A/034UNVD850/24G/WH									
	RDORKIT5A/034UNVD835/24G/WH/E									
	RDORKIT5A/034UNVD840/24G/WH/E									
	RDORKIT5A/034UNVD850/24G/WH/E									
2'x4' 45W	RDORKIT5A/045UNVD835/24G/WH	71.5/1.5	60.2/1.3	53.4/1.5	69.6/1.5	58.6/1.4	51.5/1.3	67.0/1.6	56.2/1.5	49.2/1.3
	RDORKIT5A/045UNVD840/24G/WH									
	RDORKIT5A/045UNVD850/24G/WH									
	RDORKIT5A/045UNVD835/24G/WH/E									
	RDORKIT5A/045UNVD840/24G/WH/E									
	RDORKIT5A/045UNVD850/24G/WH/E									

Physical Information

Luminaire Description	Length	Width	Height
1x4	47.8" (1215mm)	11.9" (302mm)	3.1" (78.5mm)
2x2	23.8" (605mm)	23.9" (606mm)	3.1" (78.5mm)
2x4	47.8" (1215mm)	23.9" (606mm)	3.1" (78.5mm)

1x4

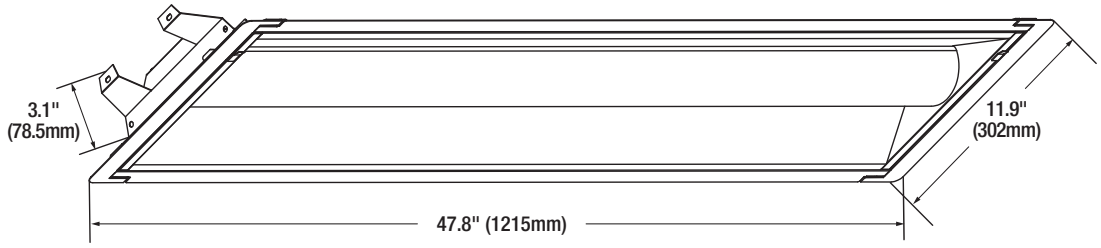

2x2

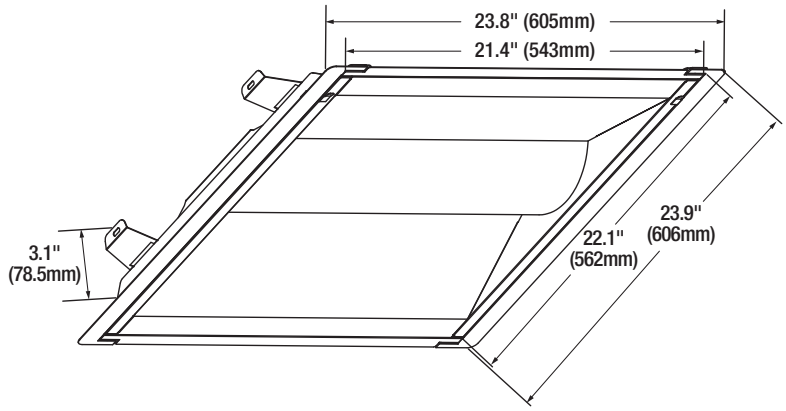

2x4

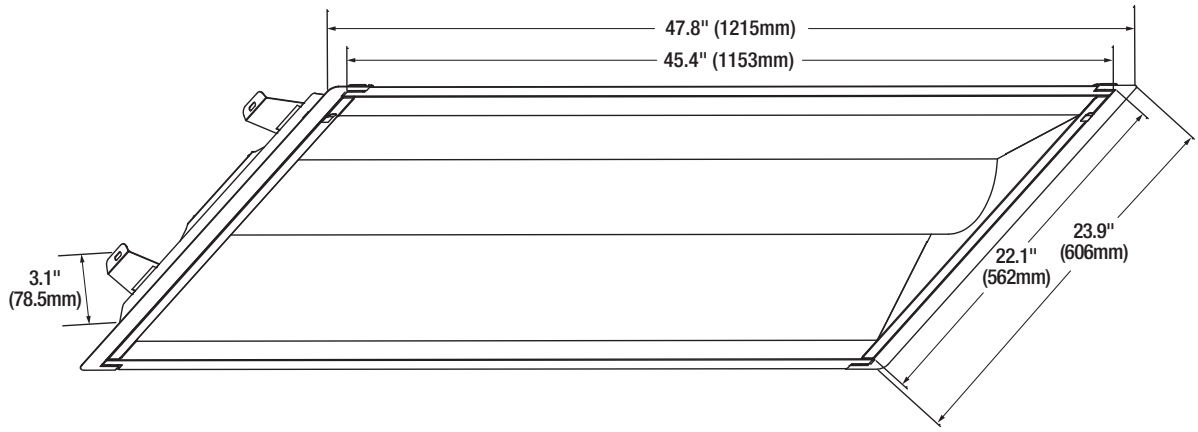

LEDVANCE LLC
200 Ballardvale Street
Wilmington, MA 01887 USA
Phone 1-800-LIGHTBULB (1-800-544-4828)
www.sylvania.com

Name:
Email:
Phone:

SYLVANIA and LEDVANCE are registered trademarks.
All other trademarks are those of their respective owners.
Licensee of product trademark SYLVANIA in general lighting.
Specifications subject to change without notice.

/sylvania /sylvania

© 2020 LEDVANCE LLC

SYLVANIA Luminaires

Troffer Retrofit Kit

Catalog #	Type
Project	
Notes	
Date	
Prepared by	

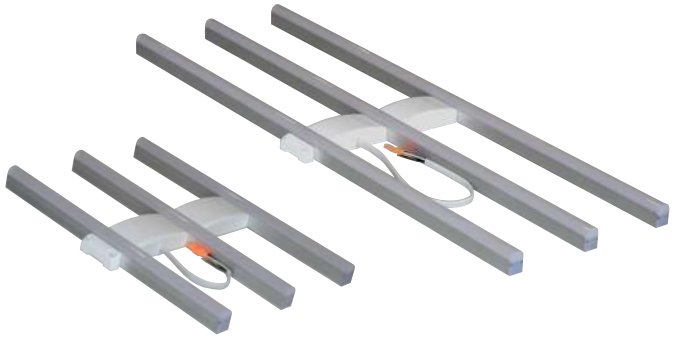

SYLVANIA Troffer Retrofit Kits are environmentally preferable LED alternatives for retrofitting traditional fluorescent lens troffer luminaires, offering up to 50% in energy savings. The kits are offered in two sizes/lamp configurations and are ideal for illuminating commercial spaces, offices, and retail applications.

The Troffer Retrofit Kits feature a safe, easy, and quick install in under 4 minutes, and they bypass the existing ballast to eliminate any ballast incompatibility issues. The SYLVANIA luminaires assure optimum light engine performance for extended service and rated life (≥50,000 hours L_{70}).

Dimensions

2x2 2-Lamp

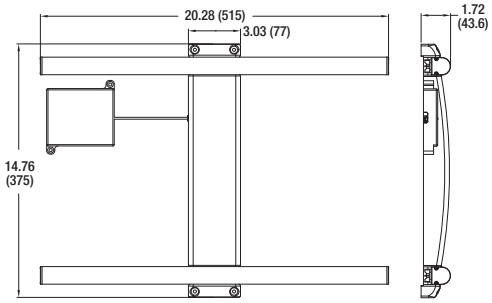

2x2 3-Lamp

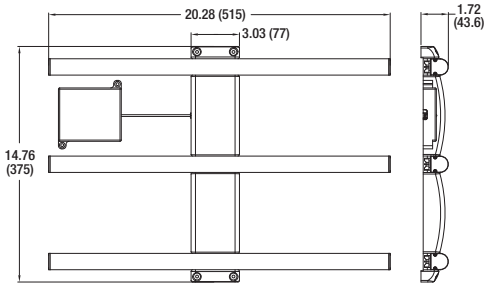

Dimensions are in inches (mm)

2x4 2-Lamp

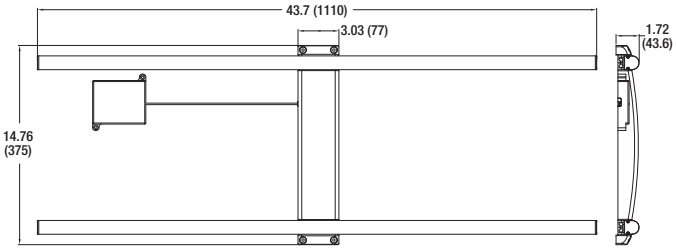

2x4 3-Lamp

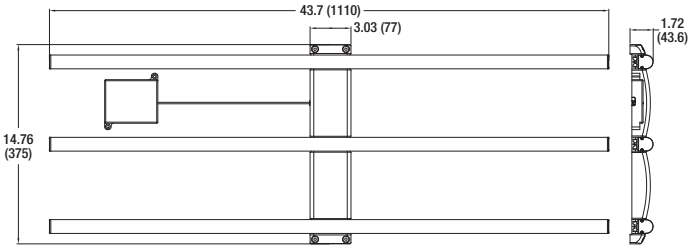

Dimensions are in inches (mm)

Specifications

Weight: 2x2 2-lamp (765g), 2x2 3-lamp (938g), 2x4 2-lamp (1123g). 2x4 3-lamp (1488g).

Construction: Lightweight plastic body with extruded aluminum light bars.

LED System: LED system with a life rating of ≥50,000 hours at L_{70} @25°C. Luminaire efficacy up to 125 LPW.

Electrical: Offered in 24, 26, 27 and 40 Watts, the luminaire is designed to operate through the 120-277 VAC universal voltage range. The LED driver is a constant current device. The power factor is ≥90% and THD is ≤20%.

Dimming: The driver is 0-10V dimmable (down to 10%).

Color Characteristics: CRI>80; CCT of 3000K, 3500K, 4000K, or 5000K.

Optics: Single white diffuse polycarbonate curved lens with 120° beam angle.

Installation: Retrofit kit to be installed inside existing troffer.

Operating Temperature: -4°F to +122°F (-20°C to +50°C).

Listings: cETLus classified to UL1598C standards and suitable for damp locations.

Warranty: Standard 5-year luminaire warranty (LED284R1).

Note: Specifications subject to change without notice. IES files available online.

Photometric Data

Average Illuminance (FC) at 30" AFF and avg/min uniformity
80/50/20 Reflectances

		8 ft Mounting Height			10 ft Mounting Height			12 ft Mounting Height		
		On Center Fixture Spacing			On Center Fixture Spacing			On Center Fixture Spacing		
		8'x10'	10'x10'	10'x12'	8'x10'	10'x10'	10'x12'	8'x10'	10'x10'	10'x12'
2 Ft – 2-Lamp	**24W**	35/1.8	29/1.6	25/1.7	34/1.8	28/1.6	24/1.4	32/1.8	27/1.7	23/1.5
2 Ft – 3-Lamp	**26W**	38/1.8	31/1.6	27/1.7	36/1.7	30/1.5	26/1.4	35/1.8	29/1.7	25/1.5
4 Ft – 2-Lamp	**27W**	37/1.9	30/1.6	26/1.8	36/1.8	29/1.5	25/1.5	34/1.8	28/1.7	24/1.5
4 Ft – 3-Lamp	**40W**	53/1.8	44/1.6	37/1.9	52/1.8	42/1.6	36/1.4	50/1.9	41/1.7	35/1.5

Ordering Guide

Item Number:

LED /	**TROFF** /	**XX** /	**XXX** /	**XXX** /	**D** /	**CRI**	**XX** /	**Dimensions** /	**Finish**

LED	Product Name
	TROFF
		# Lamps
		2L = 2 lamps
		3L = 3 lamps
			024 = 24W
			026 = 26W
			027 = 27W
			040 = 40W
				Voltage
				UNV = 120-277V
					D = 0-10V	8 = 80+	Color Temperature
							30 = 3000K
							35 = 3500K
							40 = 4000K
							50 = 5000K
								22 = 2x2
								24 = 2x4
									WH = White

Ordering Information

Kit Type	Item Number	Oredering Abbreviation	Wattage	Lumens	LPW	Beam Angle	Input Voltage	CCT	Dimming	CRI
2ft – 2 Lamp	75460*	LEDR/TROFF/2L/024/UNV/D/830/22/WH	24	3000	125	120	120-277V	3000K	0-10V	82
	75461*	LEDR/TROFF/2L/024/UNV/D/835/22/WH	24	3000	125	120	120-277V	3500K	0-10V	82
	75462*	LEDR/TROFF/2L/024/UNV/D/840/22/WH	24	3000	125	120	120-277V	4000K	0-10V	82
	75463*	LEDR/TROFF/2L/024/UNV/D/850/22/WH	24	3000	125	120	120-277V	5000K	0-10V	82
2ft – 3 Lamp	75431*	LEDR/TROFF/3L/026/UNV/D/830/22/WH	26	3200	123	120	120-277V	3000K	0-10V	82
	75432*	LEDR/TROFF/3L/026/UNV/D/835/22/WH	26	3200	123	120	120-277V	3500K	0-10V	82
	75433	LEDR/TROFF/3L/026/UNV/D/840/22/WH	26	3200	123	120	120-277V	4000K	0-10V	82
	75434*	LEDR/TROFF/3L/026/UNV/D/850/22/WH	26	3200	123	120	120-277V	5000K	0-10V	82
4ft – 2 Lamp	75427*	LEDR/TROFF/2L/027/UNV/D/830/24/WH	27	3200	119	120	120-277V	3000K	0-10V	82
	75428*	LEDR/TROFF/2L/027/UNV/D/835/24/WH	27	3200	119	120	120-277V	3500K	0-10V	82
	75429*	LEDR/TROFF/2L/027/UNV/D/840/24/WH	27	3200	119	120	120-277V	4000K	0-10V	82
	75430*	LEDR/TROFF/2L/027/UNV/D/850/24/WH	27	3200	119	120	120-277V	5000K	0-10V	82
4ft – 3 Lamp	75496*	LEDR/TROFF/3L/040/UNV/D/830/24/WH	40	4800	120	120	120-277V	3000K	0-10V	82
	75497*	LEDR/TROFF/3L/040/UNV/D/835/24/WH	40	4800	120	120	120-277V	3500K	0-10V	82
	75498	LEDR/TROFF/3L/040/UNV/D/840/24/WH	40	4800	120	120	120-277V	4000K	0-10V	82
	75499*	LEDR/TROFF/3L/040/UNV/D/850/24/WH	40	4800	120	120	120-277V	5000K	0-10V	82

* Made to order with lead time.

Application Information

Application Notes

1. The troffer retrofit kit (all models) is compatible with the Bodine emergency back-up model ELI-S-100 and IOTA models IIS-125 and IIS-35.
2. Check fixture compatibility with our troffer retrofit kit before installation.
3. Check the compatible troffer list at: https://www.sylvania.com/en-us/products/solid-state-lighting-led/Pages/LED-RT-Literature-Gallery.aspx
4. Qualifies for DLC 4.1.

LEDVANCE LLC
200 Ballardvale Street
Wilmington, MA 01887 USA
Phone 1-800-LIGHTBULB (1-800-544-4828)
www.sylvania.com

SYLVANIA and LEDVANCE are registered trademarks.
All other trademarks are those of their respective owners.
Licensee of product trademark SYLVANIA in general lighting.
Specifications subject to change without notice.

/sylvania /sylvania

© 2019 LEDVANCE LLC

SYLVANIA Luminaires

High Bay

Catalog #	Type
Project	
Notes	
Date	
Prepared by	

Dimensions

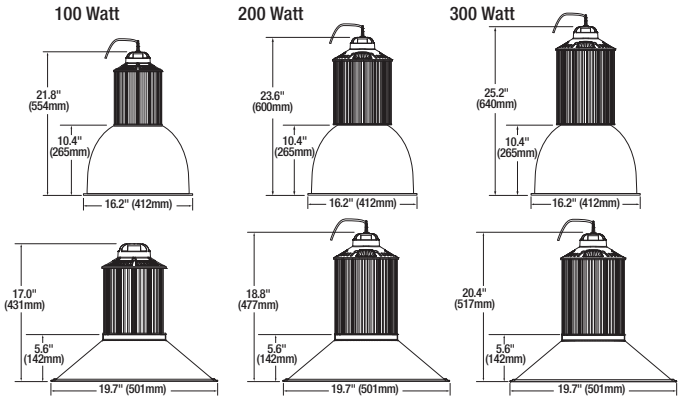

Product Features

- Lightweight, impact resistant fixture is designed for easy and safe installation
- Traditional design with multiple optic choices that enhance lumen output
- 1 for 1 replacement up to 1000W MH/HPS fixture and wide operating temperature

Specifications

Weight: 100W: UNV: 9.5lbs (4.3kg) HUV: 10.3lbs (4.7kg)
200W: UNV: 12.5lbs (5.7kg) HUV: 13lbs (5.9kg)
300W: UNV: 15.5lbs (7kg) HUV: 16lbs (7.3kg)

Construction: Two-piece cast, low copper (<0.4% Cu) aluminum alloy with powder coat paint and IK08 UV stabilized polycarbonate refractor or aluminum reflector. The standard color is gray.

LED System: LED system with a life rating of ≥63,000 hours (100W versions), ≥73,000 hours (300W versions), or ≥150,000 hours (200W and HUV versions) at L_{70} @25°C. Luminaire efficacy up to 125 LPW.

Electrical: Offered in 100, 200 and 300 Watts, the luminaire is designed to operate through 120-277 or 347-480 VAC voltage. The LED driver has a 4kV inherent surge suppression and is a constant current device, meeting UL1310 and UL48 Class 1 with built-in over temperature protection. The power factor is ≥90% and THD is ≤20%.

Dimming: The driver is 0-10V dimmable (down to 16%). Please reference the dimmer compatibility document (LEDLUM012).

Color Characteristics: CRI>80; CCT of 3500K, 4000K or 5000K.

Optics: Type V distribution with a 16 inch polycarbonate open refractor. (Bottom lens accessory available.) Type V distribution with a 20 inch aluminum reflector.

Installation: Luminaire mounts via hook with 6-foot flying lead cable (included).

Operating Temperature: 100W/200W (UNV/HUV): -40°F to +122°F (-40°C to +50°C).
300W: -40°F to +104°F (-40°C to +40°C).

Listings: cULus listed to UL1598 standards for damp locations.

Warranty: Standard 5-year luminaire warranty (LEDLUM001).

Note: Specifications subject to change without notice. IES files available online.

* See page 2 for DLC listings.

Wattage Comparison Chart

Traditional Source	Traditional System Wattage	LED System Wattage	Energy Savings
250W MH	290	100	66%
250W HPS	295	100	66%
320W MH	370	200	46%
400W HPS	460	200	57%
400W MH	450	200	56%
750W MH	820	300	63%
750W HPS	840	300	64%
1000W MH	1080	300	72%
1000W HPS	1100	300	73%

Ordering Guide

Item Number:

HIBAY	1A	/	XXX	XXX	D	8	XX	/	GR	/	X
Product Name HIBAY	Generation 1A		Wattage 100 = 100 Watts 200 = 200 Watts 300 = 300 Watts	Voltage UNV = 120-277V HUV = 347-480V	Dimming D = 0-10V	CRI 8 = >80	Color Temp (CCT) 35 = 3500K* 40 = 4000K 50 = 5000K		Color/Finish GR = Gray		Options Blank = No Options E = Emergency**

*Available for 100 and 200W only
**Available for 200W only

Photometric Data

HIBAY1A/100UNVD850
Isofootcandle Lines at 20' Mounting Height

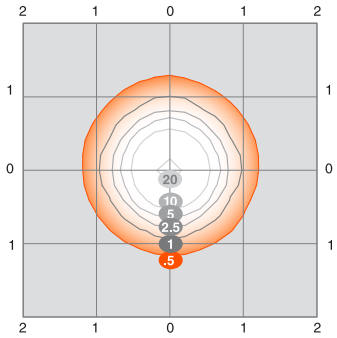

HIBAY1A/200UNVD850
Isofootcandle Lines at 20' Mounting Height

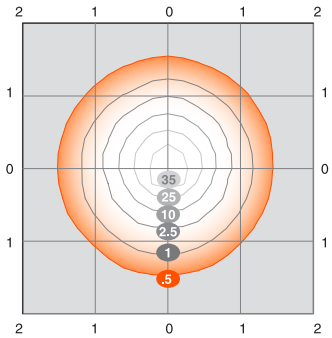

HIBAY1A/300UNVD850
Isofootcandle Lines at 30' Mounting Height

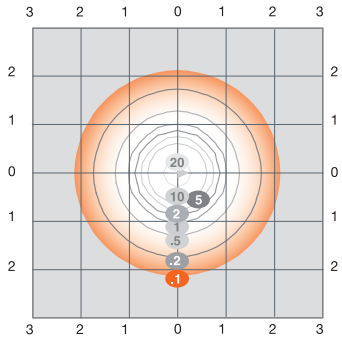

For other mounting heights apply the following multipliers:

Mounting Height	18'	20'	22'	25'	30'
Multiplier	1.23	1.00	0.83	0.64	0.44

Mounting Height	18'	20'	22'	25'	30'
Multiplier	1.23	1.00	0.83	0.64	0.44

Mounting Height	22'	25'	30'	32'	35'
Multiplier	1.86	1.44	1.00	0.88	0.73

*Photometric data based on housing with refractor.

Ordering Information

Item Number	Ordering Abbreviation	Power (W)	Input Voltage	Dimming	CRI	Color Temp (CCT)	Total Fixture Lumens Refractor	Total Fixture Lumens Reflector	LPW* Refractor	LPW* Reflector	DLC** Refractor	DLC** Reflector	Options	MTO***
60101	HIBAY1A/100UNVD835/GR	100	120-277V	0-10V	>80	3500K	11,300	11,200	120	119	Std	Std	–	MTO
74230	HIBAY1A/100UNVD840/GR	100	120-277V	0-10V	>80	4000K	10,800	11,000	108	108	Std	Std	–	
74231	HIBAY1A/100UNVD850/GR	100	120-277V	0-10V	>80	5000K	10,800	10,800	108	108	Std	Std	–	
60102	HIBAY1A/200UNVD835/GR	200	120-277V	0-10V	>80	3500K	21,900	21,900	111	111	Std	Std	–	MTO
74232	HIBAY1A/200UNVD840/GR	200	120-277V	0-10V	>80	4000K	22,200	22,500	114	116	Std	Std	–	
74233	HIBAY1A/200UNVD850/GR	200	120-277V	0-10V	>80	5000K	22,500	22,900	115	116	Std	Std	–	
74515	HIBAY1A/200UNVD840/GR/E	200	120-277V	0-10V	>80	4000K	22,200	22,500	114	116	Std	Std	Emergency	
74516	HIBAY1A/200UNVD850/GR/E	200	120-277V	0-10V	>80	5000K	22,500	22,900	115	116	Std	Std	Emergency	
71731	HIBAY1A/300UNVD840/GR	300	120-277V	0-10V	>80	4000K	33,300	34,200	109	112	Std	Std	–	
71732	HIBAY1A/300UNVD850/GR	300	120-277V	0-10V	>80	5000K	33,700	34,800	110	113	Std	Std	–	
74509	HIBAY1A/100HUVD840/GR	100	347-480V	0-10V	>80	4000K	10,800	10,500	108	109	Std	Std	–	
74510	HIBAY1A/100HUVD850/GR	100	347-480V	0-10V	>80	5000K	10,800	10,900	108	114	Std	Std	–	
74511	HIBAY1A/200HUVD840/GR	200	347-480V	0-10V	>80	4000K	23,300	23,700	123	125	Std	Std	–	
74512	HIBAY1A/200HUVD850/GR	200	347-480V	0-10V	>80	5000K	23,100	23,400	122	124	Std	Std	–	
60147	HIBAY1A/300HUVD840/GR	300	347-480V	0-10V	>80	4000K	33,000	34,000	110	110	Std	Std	–	
60148	HIBAY1A/300HUVD850/GR	300	347-480V	0-10V	>80	5000K	33,000	34,000	110	110	Std	Std	–	

*LPW per LM79 report.
**Std for DLC Standard.
***Made To Order

Optics (B or C)

Item Number	Ordering Abbreviation	Item Description	Optic
74234	HIBAY1A/16H5	16 inch Polycarbonate Refractor (IK08)	B
74395	HIBAY1A/20AL5	20 inch Aluminum Reflector	C

Housing (A) + Optics (B or C) =

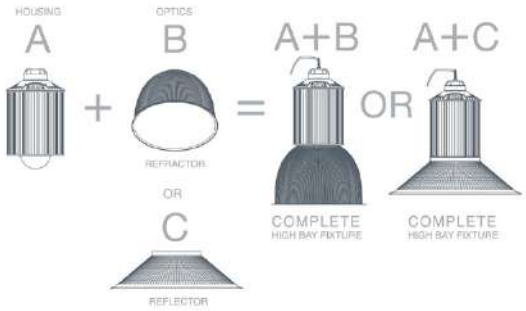

Accessories and Replacement Parts

Item Number	Ordering Abbreviation	Item Description
74449	HIBAY1A/BOTTOMLENS/16H5	Refractor Bottom Lens

LEDVANCE LLC
200 Ballardvale Street
Wilmington, MA 01887 USA
Phone 1-800-LIGHTBULB (1-800-544-4828)
www.sylvania.com

SYLVANIA and LEDVANCE are registered trademarks.
All other trademarks are those of their respective owners.
Licensee of product trademark SYLVANIA in general lighting.
Specifications subject to change without notice.

/sylvania /sylvania

© 2019 LEDVANCE LLC

SYLVANIA Luminaires

ValueLED™ UFO High Bay

Item #	
Type	
Project	
Notes	
Date	

Application

An environmentally preferable alternative to traditional luminaires and offering up to 78% energy savings, the ValueLED UFO High Bay is ideal for illuminating warehouses, gymnasiums, and other industrial applications.

Benefits and Features

- Lightweight fixture is designed for easy and safe installation
- Multiple mounting options for a variety of applications – pendant, hook, surface mount
- Mounting hook and mounting bracket included
- Variety of optics – polycarbonate refractor and aluminum reflector available
- IP65 rated aluminum body (finish is white)
- Tempered glass lens
- Up to 135 LPW
- 3500K, 4000K and 5000K color temperatures
- CRI >80
- Offered in 100, 150, 200, and 240 watts

Electrical

- Designed to operate through 120-277V (UNV) or 347-480 (HUV) VAC voltage
- Power Factor >90%
- THD <20%
- 0-10V dimming
- Constant current LED driver with 4kV surge suppression

Rated Life

- ≥150,000 hours (L_{70}) @25°C

Warranty

- 5-year

Ambient Operating Range

- -40°F to +122°F (-40°C to +50°C) (100, 150 and 200W versions)
- -40°F to +113°F (-40°C to +45°C) (240W versions)

Certifications and Listings

- cULus
- RoHS
- FCC
- DLC Premium

Wattage Comparison

Traditional Source	Traditional System Wattage	LED System Wattage	Energy Savings
250W MH	290	100	66%
250W HPS	295	100	66%
320W MH	370	150	59%
400W HPS	460	150	67%
400W MH	450	150	67%
750W MH	820	200	76%
750W HPS	840	200	76%
1000W MH	1080	240	78%
1000W HPS	1100	240	78%

Installation

- Luminaire mounting options include hanging via hook, surface mounting, or pendant mounting with included mounting bracket.
- Aluminum reflector, polycarbonate refractor, and polycarbonate bottoms lens also available.
- Includes 6' power cable and 3' dimming cable.
- Polycarbonate refractor and polycarbonate bottom lens have an IK08 rating.

Ordering Guide

UFOHIBA	1A	/	XXX	XXX	D	8	XX	/	WH	/	X
Product Name UFOHIBA = UFO High Bay	Generation 1A		Wattage 100 = 100 Watts 150 = 150 Watts 200 = 200 Watts 240 = 240 Watts	Voltage UNV = 120-277V HUV = 347-480V	Dimming D = 0-10V	CRI 8 = >80	Color Temp (CCT) 35 = 3500K 40 = 4000K 50 = 5000K		Color/Finish WH = White		Options blank = no option D = Motion/Daylight Sensor

Ordering Information

Item Number	Ordering Abbreviation	Wattage	Input Voltage	Dimming	CRI	Color Temp	Total Fixture Lumens	LPW	Total Fixture Lumens (with Refractor Accessory)	LPW	DLC	Options	MTO*
61121	UFOHIBA1A/100UNVD835/WH	100	120-277	0-10	>80	3500K	13,800	133	13,100	126	Prm	–	MTO
61122	UFOHIBA1A/100UNVD840/WH	100	120-277	0-10	>80	4000K	13,800	133	13,100	126	Prm	–	
61123	UFOHIBA1A/100UNVD850/WH	100	120-277	0-10	>80	5000K	13,800	133	13,100	126	Prm	–	
61124	UFOHIBA1A/150UNVD835/WH	150	120-277	0-10	>80	3500K	20,300	135	19,200	127	Prm	–	MTO
61125	UFOHIBA1A/150UNVD840/WH	150	120-277	0-10	>80	4000K	20,300	135	19,200	127	Prm	–	
61126	UFOHIBA1A/150UNVD850/WH	150	120-277	0-10	>80	5000K	20,300	135	19,200	127	Prm	–	
61127	UFOHIBA1A/200UNVD835/WH	200	120-277	0-10	>80	3500K	26,000	130	26,000	127	Prm	–	MTO
61128	UFOHIBA1A/200UNVD840/WH	200	120-277	0-10	>80	4000K	26,000	130	26,000	127	Prm	–	
61129	UFOHIBA1A/200UNVD850/WH	200	120-277	0-10	>80	5000K	26,000	130	26,000	127	Prm	–	
61130	UFOHIBA1A/240UNVD835/WH	240	120-277	0-10	>80	3500K	31,300	132	30,300	127	Prm	–	MTO
61131	UFOHIBA1A/240UNVD840/WH	240	120-277	0-10	>80	4000K	31,300	132	30,300	127	Prm	–	
61132	UFOHIBA1A/240UNVD850/WH	240	120-277	0-10	>80	5000K	31,300	132	30,300	127	Prm	–	
61133	UFOHIBA1A/100HUVD835/WH	100	347-480	0-10	>80	3500K	13,800	133	13,100	126	Prm	–	MTO
61134	UFOHIBA1A/100HUVD840/WH	100	347-480	0-10	>80	4000K	13,800	133	13,100	126	Prm	–	
61135	UFOHIBA1A/100HUVD850/WH	100	347-480	0-10	>80	5000K	13,800	133	13,100	126	Prm	–	
61136	UFOHIBA1A/150HUVD835/WH	150	347-480	0-10	>80	3500K	20,300	135	19,200	127	Prm	–	MTO
61137	UFOHIBA1A/150HUVD840/WH	150	347-480	0-10	>80	4000K	20,300	135	19,200	127	Prm	–	
61138	UFOHIBA1A/150HUVD850/WH	150	347-480	0-10	>80	5000K	20,300	135	19,200	127	Prm	–	
61139	UFOHIBA1A/200HUVD835/WH	200	347-480	0-10	>80	3500K	26,000	130	26,000	127	Prm	–	MTO
61140	UFOHIBA1A/200HUVD840/WH	200	347-480	0-10	>80	4000K	26,000	130	26,000	127	Prm	–	
61141	UFOHIBA1A/200HUVD850/WH	200	347-480	0-10	>80	5000K	26,000	130	26,000	127	Prm	–	
61142	UFOHIBA1A/240HUVD835/WH	240	347-480	0-10	>80	3500K	31,300	132	30,300	127	Prm	–	MTO
61143	UFOHIBA1A/240HUVD840/WH	240	347-480	0-10	>80	4000K	31,300	132	30,300	127	Prm	–	
61144	UFOHIBA1A/240HUVD850/WH	240	347-480	0-10	>80	5000K	31,300	132	30,300	127	Prm	–	
61145	UFOHIBA1A/100UNVD835/WH/D	100	120-277	0-10	>80	3500K	13,800	133	13,100	126	Prm	Motion/Daylight Sensor	MTO
61146	UFOHIBA1A/100UNVD840/WH/D	100	120-277	0-10	>80	4000K	13,800	133	13,100	126	Prm	Motion/Daylight Sensor	MTO
61147	UFOHIBA1A/100UNVD850/WH/D	100	120-277	0-10	>80	5000K	13,800	133	13,100	126	Prm	Motion/Daylight Sensor	MTO
61148	UFOHIBA1A/150UNVD835/WH/D	150	120-277	0-10	>80	3500K	20,300	135	19200	127	Prm	Motion/Daylight Sensor	MTO
61149	UFOHIBA1A/150UNVD840/WH/D	150	120-277	0-10	>80	4000K	20,300	135	19200	127	Prm	Motion/Daylight Sensor	MTO
61150	UFOHIBA1A/150UNVD850/WH/D	150	120-277	0-10	>80	5000K	20,300	135	19200	127	Prm	Motion/Daylight Sensor	MTO
61151	UFOHIBA1A/200UNVD835/WH/D	200	120-277	0-10	>80	3500K	26,000	130	26,000	127	Prm	Motion/Daylight Sensor	MTO
61152	UFOHIBA1A/200UNVD840/WH/D	200	120-277	0-10	>80	4000K	26,000	130	26,000	127	Prm	Motion/Daylight Sensor	MTO
61153	UFOHIBA1A/200UNVD850/WH/D	200	120-277	0-10	>80	5000K	26,000	130	26,000	127	Prm	Motion/Daylight Sensor	MTO
61154	UFOHIBA1A/240UNVD835/WH/D	240	120-277	0-10	>80	3500K	31,300	132	30,300	127	Prm	Motion/Daylight Sensor	MTO
61155	UFOHIBA1A/240UNVD840/WH/D	240	120-277	0-10	>80	4000K	31,300	132	30,300	127	Prm	Motion/Daylight Sensor	MTO
61156	UFOHIBA1A/240UNVD850/WH/D	240	120-277	0-10	>80	5000K	31,300	132	30,300	127	Prm	Motion/Daylight Sensor	MTO
61157	UFOHIBA1A/100HUVD835/WH/D	100	347-480	0-10	>80	3500K	13,800	133	13,100	126	Prm	Motion/Daylight Sensor	MTO
61158	UFOHIBA1A/100HUVD840/WH/D	100	347-480	0-10	>80	4000K	13,800	133	13,100	126	Prm	Motion/Daylight Sensor	MTO
61159	UFOHIBA1A/100HUVD850/WH/D	100	347-480	0-10	>80	5000K	13,800	133	13,100	126	Prm	Motion/Daylight Sensor	MTO
61160	UFOHIBA1A/150HUVD835/WH/D	150	347-480	0-10	>80	3500K	20,300	135	19200	127	Prm	Motion/Daylight Sensor	MTO
61161	UFOHIBA1A/150HUVD840/WH/D	150	347-480	0-10	>80	4000K	20,300	135	19200	127	Prm	Motion/Daylight Sensor	MTO
61162	UFOHIBA1A/150HUVD850/WH/D	150	347-480	0-10	>80	5000K	20,300	135	19200	127	Prm	Motion/Daylight Sensor	MTO
61163	UFOHIBA1A/200HUVD835/WH/D	200	347-480	0-10	>80	3500K	26,000	130	26,000	127	Prm	Motion/Daylight Sensor	MTO
61164	UFOHIBA1A/200HUVD840/WH/D	200	347-480	0-10	>80	4000K	26,000	130	26,000	127	Prm	Motion/Daylight Sensor	MTO
61165	UFOHIBA1A/200HUVD850/WH/D	200	347-480	0-10	>80	5000K	26,000	130	26,000	127	Prm	Motion/Daylight Sensor	MTO
61166	UFOHIBA1A/240HUVD835/WH/D	240	347-480	0-10	>80	3500K	31,300	132	30,300	127	Prm	Motion/Daylight Sensor	MTO
61167	UFOHIBA1A/240HUVD840/WH/D	240	347-480	0-10	>80	4000K	31,300	132	30,300	127	Prm	Motion/Daylight Sensor	MTO
61168	UFOHIBA1A/240HUVD850/WH/D	240	347-480	0-10	>80	5000K	31,300	132	30,300	127	Prm	Motion/Daylight Sensor	MTO

*Made To Order

Photometric Data

		Polycarbonate Refractor	Aluminum Reflector
100W	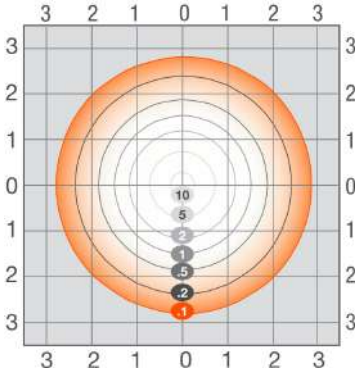	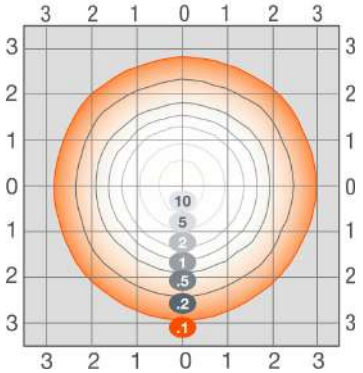	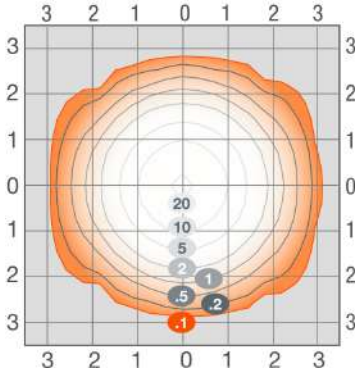
	Isofootcandle Lines at 20' Mounting Height	Isofootcandle Lines at 20' Mounting Height	Isofootcandle Lines at 20' Mounting Height
150W	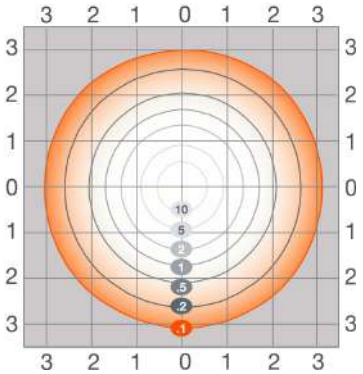	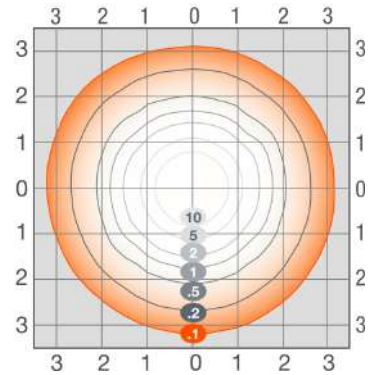	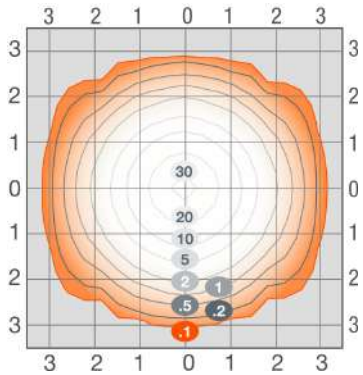
	Isofootcandle Lines at 20' Mounting Height	Isofootcandle Lines at 20' Mounting Height	Isofootcandle Lines at 20' Mounting Height
200W	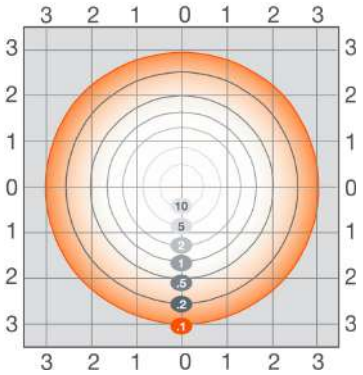	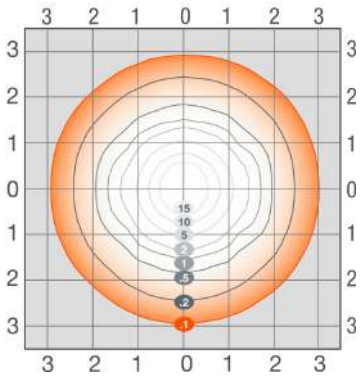	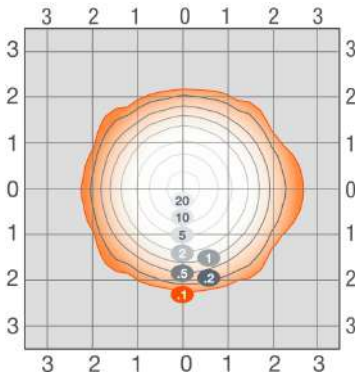
	Isofootcandle Lines at 30' Mounting Height	Isofootcandle Lines at 30' Mounting Height	Isofootcandle Lines at 30' Mounting Height
240W	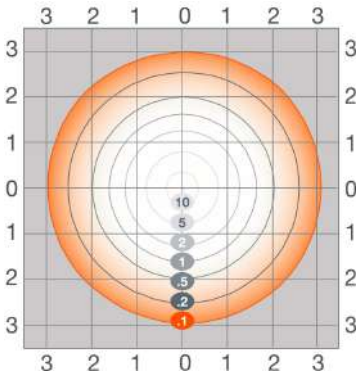	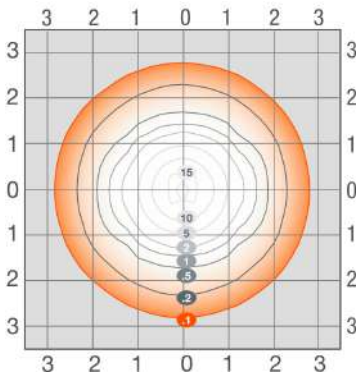	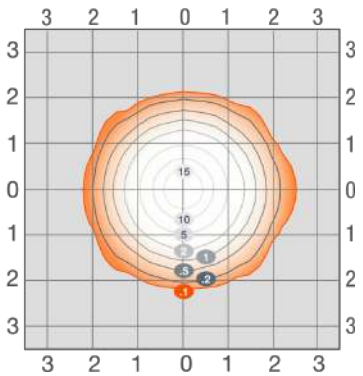
	Isofootcandle Lines at 30' Mounting Height	Isofootcandle Lines at 30' Mounting Height	Isofootcandle Lines at 30' Mounting Height

Physical Information

Luminaire Description	Diameter	Height
100W/150W	11.7"	9.0"
200W/240W	14.2"	9.9"

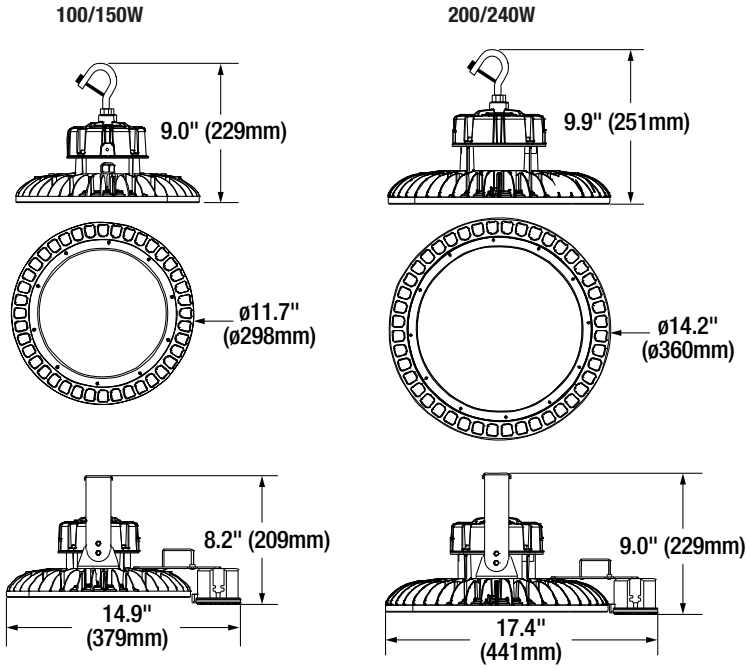

Accessories

Item Number	Ordering Abbreviation	Item Description
61428	UFOHIBA1A/PC1/T5	Polycarbonate refractor for 100 and 150W (Type V distribution with IK08 rating)
61429	UFOHIBA1A/PC2/T5	Polycarbonate refractor for 200 and 240W (Type V distribution with IK08 rating)
61430	UFOHIBA1A/AL1/90	Aluminum reflector for 100 and 150W (90° beam angle)
61431	UFOHIBA1A/AL2/90	Aluminum reflector for 200 and 240W (90° beam angle)
61432	UFOHIBA1A/BOTTOMLENS	Polycarbonate bottom lens
60105	HIBAY2A/REMOTE	Sensor Remote (functional up to 49ft (15m))

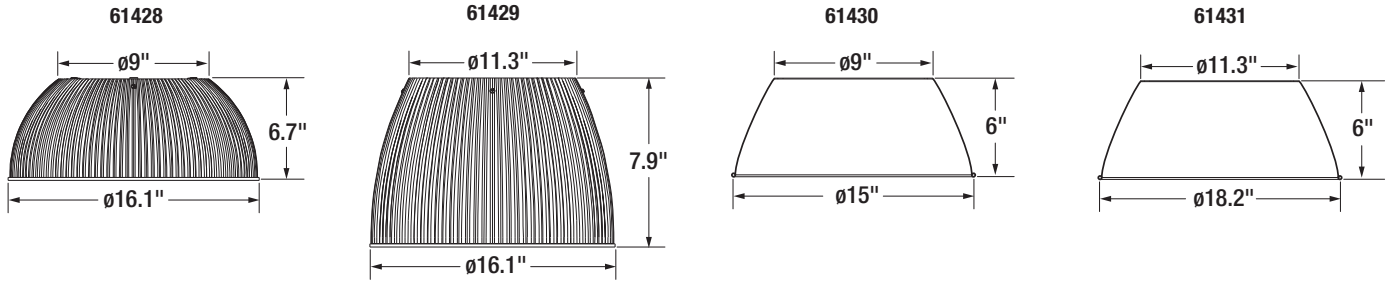

Sensor Options Information

Motion	100% Lumen output
≥5 min no motion	30% Lumen output
≥60 min no motion	Off Lumen output

Stand-by power: <1W

Detection area options: 25%/50%/75%/100%*

Hold time options: 5s/30s/1min/3min/5min/10min/20min/30min

Daylight threshold options: 2Lux/10Lux/30Lux/50Lux 80Lux/120Lux/Disable

Stand-by period options: 0s/10s/30s/1min/5min/10min/30min/+∞

Mounting height: Max – 49ft (15m)

Dimming Level: 10%, 20%, 30%, 50%

*25% and 50% can only be accessed via the remote (NAED 60105).

Detection Range*

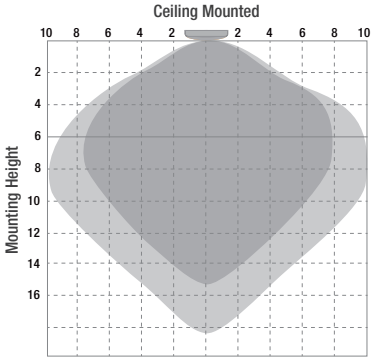

*Dark grey denotes maximum sensitivity
Light grey denotes decreased sensitivity

Graph is shown at 100% detection range; units are shown in meters.

DIP Switch Settings

● Switch UP

○ Switch DOWN

Detection area

Hold-time

Daylight threshold

Stand-by dimming level

Stand-by period

●	100%
○	75%

Detection area

Detection area means detection coverage. It can be adjusted by combining DIP switches for specific application.

●	●	●	5s
○	●	●	30s
●	●	○	1min
○	○	●	5min
○	●	○	10min
●	○	○	20min
○	○	○	30min

Hold-time

Hold-time means the time period the light will be ON after the last detection.

●	●	●	Disable
○	●	●	120lux
●	●	○	80lux
○	○	●	50lux
○	●	○	30lux
●	○	○	10lux
○	○	○	2lux

Daylight threshold

Daylight sensor prior to motion sensor. Set threshold for specific needs. If disabled, only motion sensor works.

●	●	●	0s
○	●	●	10s
●	●	○	30s
○	○	●	1min
○	●	○	5min
●	○	○	30min
○	○	○	+∞

Stand-by period

This is the time period the light keeps dimming down after the last detection.

●	●	10%
●	○	20%
○	●	30%
○	○	50%

Stand-by dimming level

This is the dimming level the light keeps during stand-by period.

Remote control setting and DIP switch setting shift

If the sensor was last set by the DIP switch, all settings will follow the DIP switch setting regardless of whether any key was changed. For example: when user changes the detection range by changing switch 1 and 2, all other settings (hold time, stand-by period, daylight sensor, stand-by dimming level) will follow the DIP switch setting even though user did not change them.

If user changes any setting by remote control, the setting will be changed by the relevant button only; other settings will remain. For example: when user changes the hold time by pressing the hold time buttons, only the hold time will be changed; other settings (detection range, stand-by period, daylight sensor, stand-by dimming level) will follow the previous setting.

LEDVANCE LLC
200 Ballardvale Street
Wilmington, MA 01887 USA
Phone 1-800-LIGHTBULB (1-800-544-4828)
www.sylvania.com

SYLVANIA and LEDVANCE are registered trademarks.
All other trademarks are those of their respective owners.
Licensee of product trademark SYLVANIA in general lighting.
Specifications subject to change without notice.

/sylvania /sylvania

Name:

Email:

Phone:

© 2020 LEDVANCE LLC

SYLVANIA Luminaires

UltraLED™ Linear High Bay

Item #	
Type	
Project	
Notes	
Date	

Application

Warehouses, manufacturing facilities, big-box retail, gymnasiums, and industrial applications.

Benefits and Features

- DLC Premium listed to maximize rebate opportunities
- Lightweight and easy to install
- A variety of mounting accessories and wire guards are available
- Up to 130 LPW
- 4000K and 5000K color temperature
- CRI >80
- Offered in 100, 120, 150, 200, 250, and 300 watts as well as in 1x2, 1x4, 2x2, and 2x4 dimensions
- Offered in wide and aisle distribution
- Energy savings up to 73%

Electrical

- UNV versions designed to operate between 120-277VAC
- HUV versions designed to operate between 347-480VAC
- All LED drivers have a 4kV inherent surge suppression and meet UL1310 and UL48 Class 1 with built-in over temperature protection
- Power Factor >90%
- THD <20%
- 0-10V dimmable (down to 10%). Please reference the compatibility document (LEDLUM012)

Rated Life

- LED system with a life rating of ≥140,000 hours at L_{70} @25°C

Warranty

- 5-year

Ambient Operating Range

- -40°F to +131°F (-40°C to +55°C)

Certifications and Listings

- cULus listed to UL 1598
- RoHS
- FCC
- DLC Premium

Wattage Comparison

Traditional Source	Traditional System Wattage	LED System Wattage	Energy Savings
4-lamp 32T8	112	100	11%
250W MH	290	100	66%
250W HPS	295	100	66%
4-lamp 54T5H0	220	120	45%
8-lamp 32T8	224	120	46%
250W MH	290	120	59%
250W HPS	295	120	59%
4-lamp 54T5H0	220	150	32%
8-lamp 32T8	224	150	33%
250W MH	290	150	48%
250W HPS	295	150	49%
320W MH	370	150	59%
6-lamp 54T5H0	350	200	43%
320W MH	370	200	46%
400W HPS	460	200	57%
400W MH	450	200	56%
8-lamp 54T5H0	480	250	48%
400W MH	450	250	44%
750W MH	820	250	70%
750W HPS	840	250	70%
8-lamp 54T5H0	480	300	38%
750W HPS	840	300	64%
1000W MH	1080	300	72%
1000W HPS	1100	300	73%

Installation

- Luminaire can be surface mounted or suspended via aircraft cable, chain, or pendant mounted (hardware sold separately). External controls can be added through existing knockouts.

Ordering Guide

LNHIBA	2A	/	XXX	UNV	D	8	XX	/	XX	X	/	WH	/	X
Product Name LNHIBA	Generation 2A		Wattage 100 = 100W 120 = 120W 150 = 150W 200 = 200W 250 = 250W 300 = 300W	Voltage UNV = 120-277V HUV = 347-480V	Dimming D = 0-10V	CRI 8 = >80	Color Temp (CCT) 40 = 4000K 50 = 5000K		Dimensions 12 = 1x2 14 = 1x4 22 = 2x2 24 = 2x4	Distribution W = Wide distribution A = Aisle distribution		Color/Finish WH = White		Options Blank = No Options D = Daylight/ Motion Sensor DE = Daylight/Motion Sensor + Emergency Battery Back-up E = Emergency Battery Back-up

Ordering Information

Item Number	Ordering Abbreviation	Wattage (W)	Input Voltage	Dimming	CRI	Color Temp (CCT)	Distribution	Dimensions	Total Fixture Lumens	DLC	LPW	MTO*	Options
60460	LNHIBA2A/100UNVD840/12W/WH	100	120-277	0-10	>80	4000K	Wide	1x2	12,900	Prm	130		
60461	LNHIBA2A/100UNVD840/12A/WH	100	120-277	0-10	>80	4000K	Aisle	1x2	12,900	Prm	130	MTO	
60462	LNHIBA2A/100UNVD850/12W/WH	100	120-277	0-10	>80	5000K	Wide	1x2	12,900	Prm	130		
60463	LNHIBA2A/100UNVD850/12A/WH	100	120-277	0-10	>80	5000K	Aisle	1x2	12,900	Prm	130	MTO	
60464	LNHIBA2A/100UNVD840/14W/WH	100	120-277	0-10	>80	4000K	Wide	1x4	12,900	Prm	130		
60465	LNHIBA2A/100UNVD840/14A/WH	100	120-277	0-10	>80	4000K	Aisle	1x4	12,900	Prm	130	MTO	
60466	LNHIBA2A/100UNVD850/14W/WH	100	120-277	0-10	>80	5000K	Wide	1x4	12,900	Prm	130		
60467	LNHIBA2A/100UNVD850/14A/WH	100	120-277	0-10	>80	5000K	Aisle	1x4	12,900	Prm	130	MTO	
60468	LNHIBA2A/120UNVD840/12W/WH	120	120-277	0-10	>80	4000K	Wide	1x2	15,400	Prm	130		
60469	LNHIBA2A/120UNVD840/12A/WH	120	120-277	0-10	>80	4000K	Aisle	1x2	15,400	Prm	130	MTO	
60470	LNHIBA2A/120UNVD850/12W/WH	120	120-277	0-10	>80	5000K	Wide	1x2	15,400	Prm	130		
60471	LNHIBA2A/120UNVD850/12A/WH	120	120-277	0-10	>80	5000K	Aisle	1x2	15,400	Prm	130	MTO	
60472	LNHIBA2A/150UNVD840/22W/WH	150	120-277	0-10	>80	4000K	Wide	2x2	19,200	Prm	130		
60473	LNHIBA2A/150UNVD840/22A/WH	150	120-277	0-10	>80	4000K	Aisle	2x2	19,200	Prm	130	MTO	
60474	LNHIBA2A/150UNVD850/22W/WH	150	120-277	0-10	>80	5000K	Wide	2x2	19,200	Prm	130		
60475	LNHIBA2A/150UNVD850/22A/WH	150	120-277	0-10	>80	5000K	Aisle	2x2	19,200	Prm	130	MTO	
60476	LNHIBA2A/150UNVD840/14W/WH	150	120-277	0-10	>80	4000K	Wide	1x4	19,200	Prm	130		
60477	LNHIBA2A/150UNVD840/14A/WH	150	120-277	0-10	>80	4000K	Aisle	1x4	19,200	Prm	130	MTO	
60478	LNHIBA2A/150UNVD850/14W/WH	150	120-277	0-10	>80	5000K	Wide	1x4	19,200	Prm	130		
60479	LNHIBA2A/150UNVD850/14A/WH	150	120-277	0-10	>80	5000K	Aisle	1x4	19,200	Prm	130	MTO	
60480	LNHIBA2A/200UNVD840/14W/WH	200	120-277	0-10	>80	4000K	Wide	1x4	25,800	Prm	130		
60481	LNHIBA2A/200UNVD840/14A/WH	200	120-277	0-10	>80	4000K	Aisle	1x4	25,800	Prm	130	MTO	
60482	LNHIBA2A/200UNVD850/14W/WH	200	120-277	0-10	>80	5000K	Wide	1x4	25,800	Prm	130		
60483	LNHIBA2A/200UNVD850/14A/WH	200	120-277	0-10	>80	5000K	Aisle	1x4	25,800	Prm	130	MTO	
60484	LNHIBA2A/250UNVD840/24W/WH	250	120-277	0-10	>80	4000K	Wide	2x4	32,200	Prm	130		
60485	LNHIBA2A/250UNVD840/24A/WH	250	120-277	0-10	>80	4000K	Aisle	2x4	32,200	Prm	130	MTO	
60486	LNHIBA2A/250UNVD850/24W/WH	250	120-277	0-10	>80	5000K	Wide	2x4	32,200	Prm	130		
60487	LNHIBA2A/250UNVD850/24A/WH	250	120-277	0-10	>80	5000K	Aisle	2x4	32,200	Prm	130	MTO	
60488	LNHIBA2A/300UNVD840/24W/WH	300	120-277	0-10	>80	4000K	Wide	2x4	38,700	Prm	130		
60489	LNHIBA2A/300UNVD840/24A/WH	300	120-277	0-10	>80	4000K	Aisle	2x4	38,700	Prm	130	MTO	
60490	LNHIBA2A/300UNVD850/24W/WH	300	120-277	0-10	>80	5000K	Wide	2x4	38,700	Prm	130		
60491	LNHIBA2A/300UNVD850/24A/WH	300	120-277	0-10	>80	5000K	Aisle	2x4	38,700	Prm	130	MTO	
60492	LNHIBA2A/100UNVD840/12W/WH/D	100	120-277	0-10	>80	4000K	Wide	1x2	12,900	Prm	130	MTO	Motion/Daylight Sensor
60493	LNHIBA2A/100UNVD840/12A/WH/D	100	120-277	0-10	>80	4000K	Aisle	1x2	12,900	Prm	130	MTO	Motion/Daylight Sensor
60494	LNHIBA2A/100UNVD850/12W/WH/D	100	120-277	0-10	>80	5000K	Wide	1x2	12,900	Prm	130	MTO	Motion/Daylight Sensor
60495	LNHIBA2A/100UNVD850/12A/WH/D	100	120-277	0-10	>80	5000K	Aisle	1x2	12,900	Prm	130	MTO	Motion/Daylight Sensor
60496	LNHIBA2A/100UNVD840/14W/WH/D	100	120-277	0-10	>80	4000K	Wide	1x4	12,900	Prm	130	MTO	Motion/Daylight Sensor
60497	LNHIBA2A/100UNVD840/14A/WH/D	100	120-277	0-10	>80	4000K	Aisle	1x4	12,900	Prm	130	MTO	Motion/Daylight Sensor
60498	LNHIBA2A/100UNVD850/14W/WH/D	100	120-277	0-10	>80	5000K	Wide	1x4	12,900	Prm	130	MTO	Motion/Daylight Sensor
60499	LNHIBA2A/100UNVD850/14A/WH/D	100	120-277	0-10	>80	5000K	Aisle	1x4	12,900	Prm	130	MTO	Motion/Daylight Sensor
60500	LNHIBA2A/120UNVD840/12W/WH/D	120	120-277	0-10	>80	4000K	Wide	1x2	15,400	Prm	130	MTO	Motion/Daylight Sensor
60501	LNHIBA2A/120UNVD840/12A/WH/D	120	120-277	0-10	>80	4000K	Aisle	1x2	15,400	Prm	130	MTO	Motion/Daylight Sensor
60502	LNHIBA2A/120UNVD850/12W/WH/D	120	120-277	0-10	>80	5000K	Wide	1x2	15,400	Prm	130	MTO	Motion/Daylight Sensor
60503	LNHIBA2A/120UNVD850/12A/WH/D	120	120-277	0-10	>80	5000K	Aisle	1x2	15,400	Prm	130	MTO	Motion/Daylight Sensor
60504	LNHIBA2A/150UNVD840/22W/WH/D	150	120-277	0-10	>80	4000K	Wide	2x2	19,200	Prm	130	MTO	Motion/Daylight Sensor
60505	LNHIBA2A/150UNVD840/22A/WH/D	150	120-277	0-10	>80	4000K	Aisle	2x2	19,200	Prm	130	MTO	Motion/Daylight Sensor
60506	LNHIBA2A/150UNVD850/22W/WH/D	150	120-277	0-10	>80	5000K	Wide	2x2	19,200	Prm	130	MTO	Motion/Daylight Sensor
60507	LNHIBA2A/150UNVD850/22A/WH/D	150	120-277	0-10	>80	5000K	Aisle	2x2	19,200	Prm	130	MTO	Motion/Daylight Sensor
60508	LNHIBA2A/150UNVD840/14W/WH/D	150	120-277	0-10	>80	4000K	Wide	1x4	19,200	Prm	130	MTO	Motion/Daylight Sensor
60509	LNHIBA2A/150UNVD840/14A/WH/D	150	120-277	0-10	>80	4000K	Aisle	1x4	19,200	Prm	130	MTO	Motion/Daylight Sensor
60510	LNHIBA2A/150UNVD850/14W/WH/D	150	120-277	0-10	>80	5000K	Wide	1x4	19,200	Prm	130	MTO	Motion/Daylight Sensor
60511	LNHIBA2A/150UNVD850/14A/WH/D	150	120-277	0-10	>80	5000K	Aisle	1x4	19,200	Prm	130	MTO	Motion/Daylight Sensor
60512	LNHIBA2A/200UNVD840/14W/WH/D	200	120-277	0-10	>80	4000K	Wide	1x4	25,800	Prm	130	MTO	Motion/Daylight Sensor
60513	LNHIBA2A/200UNVD840/14A/WH/D	200	120-277	0-10	>80	4000K	Aisle	1x4	25,800	Prm	130	MTO	Motion/Daylight Sensor
60514	LNHIBA2A/200UNVD850/14W/WH/D	200	120-277	0-10	>80	5000K	Wide	1x4	25,800	Prm	130	MTO	Motion/Daylight Sensor
60515	LNHIBA2A/200UNVD850/14A/WH/D	200	120-277	0-10	>80	5000K	Aisle	1x4	25,800	Prm	130	MTO	Motion/Daylight Sensor

*Made To Order

Ordering Information (continued)

Item Number	Ordering Abbreviation	Wattage (W)	Input Voltage	Dimming	CRI	Color Temp (CCT)	Distribution	Dimensions	Total Fixture Lumens	DLC	LPW	MTO*	Options
60516	LNHIBA2A/250UNVD840/24W/WH/D	250	120-277	0-10	>80	4000K	Wide	2x4	32,200	Prm	130	MTO	Motion/Daylight Sensor
60517	LNHIBA2A/250UNVD840/24A/WH/D	250	120-277	0-10	>80	4000K	Aisle	2x4	32,200	Prm	130	MTO	Motion/Daylight Sensor
60518	LNHIBA2A/250UNVD850/24W/WH/D	250	120-277	0-10	>80	5000K	Wide	2x4	32,200	Prm	130	MTO	Motion/Daylight Sensor
60519	LNHIBA2A/250UNVD850/24A/WH/D	250	120-277	0-10	>80	5000K	Aisle	2x4	32,200	Prm	130	MTO	Motion/Daylight Sensor
60520	LNHIBA2A/300UNVD840/24W/WH/D	300	120-277	0-10	>80	4000K	Wide	2x4	38,700	Prm	130	MTO	Motion/Daylight Sensor
60521	LNHIBA2A/300UNVD840/24A/WH/D	300	120-277	0-10	>80	4000K	Aisle	2x4	38,700	Prm	130	MTO	Motion/Daylight Sensor
60522	LNHIBA2A/300UNVD850/24W/WH/D	300	120-277	0-10	>80	5000K	Wide	2x4	38,700	Prm	130	MTO	Motion/Daylight Sensor
60523	LNHIBA2A/300UNVD850/24A/WH/D	300	120-277	0-10	>80	5000K	Aisle	2x4	38,700	Prm	130	MTO	Motion/Daylight Sensor
61764	LNHIBA2A/100UNVD840/12W/WH/DE	100	120-277	0-10V	>80	4000K	Wide	1x2	13,000	Prm	130	MTO	Daylight/Motion Sensor + Emergency Battery Back-up
61765	LNHIBA2A/100UNVD840/12A/WH/DE	100	120-277	0-10V	>80	4000K	Aisle	1x2	13,000	Prm	130	MTO	Daylight/Motion Sensor + Emergency Battery Back-up
61766	LNHIBA2A/100UNVD850/12W/WH/DE	100	120-277	0-10V	>80	5000K	Wide	1x2	13,000	Prm	130	MTO	Daylight/Motion Sensor + Emergency Battery Back-up
61767	LNHIBA2A/100UNVD850/12A/WH/DE	100	120-277	0-10V	>80	5000K	Aisle	1x2	13,000	Prm	130	MTO	Daylight/Motion Sensor + Emergency Battery Back-up
61768	LNHIBA2A/100UNVD840/14W/WH/DE	100	120-277	0-10V	>80	4000K	Wide	1x4	13,000	Prm	130	MTO	Daylight/Motion Sensor + Emergency Battery Back-up
61769	LNHIBA2A/100UNVD840/14A/WH/DE	100	120-277	0-10V	>80	4000K	Aisle	1x4	13,000	Prm	130	MTO	Daylight/Motion Sensor + Emergency Battery Back-up
61770	LNHIBA2A/100UNVD850/14W/WH/DE	100	120-277	0-10V	>80	5000K	Wide	1x4	13,000	Prm	130	MTO	Daylight/Motion Sensor + Emergency Battery Back-up
61771	LNHIBA2A/100UNVD850/14A/WH/DE	100	120-277	0-10V	>80	5000K	Aisle	1x4	13,000	Prm	130	MTO	Daylight/Motion Sensor + Emergency Battery Back-up
61772	LNHIBA2A/120UNVD840/12W/WH/DE	120	120-277	0-10V	>80	4000K	Wide	1x2	15,600	Prm	130	MTO	Daylight/Motion Sensor + Emergency Battery Back-up
61773	LNHIBA2A/120UNVD840/12A/WH/DE	120	120-277	0-10V	>80	4000K	Aisle	1x2	15,600	Prm	130	MTO	Daylight/Motion Sensor + Emergency Battery Back-up
61774	LNHIBA2A/120UNVD850/12W/WH/DE	120	120-277	0-10V	>80	5000K	Wide	1x2	15,600	Prm	130	MTO	Daylight/Motion Sensor + Emergency Battery Back-up
61775	LNHIBA2A/120UNVD850/12A/WH/DE	120	120-277	0-10V	>80	5000K	Aisle	1x2	15,600	Prm	130	MTO	Daylight/Motion Sensor + Emergency Battery Back-up
65244	LNHIBA2A/150UNVD840/22W/WH/DE	150	120-277	0-10V	>80	4000K	Wide	2x2	19,200	Prm	130	MTO	Daylight/Motion Sensor + Emergency Battery Back-up
65245	LNHIBA2A/150UNVD840/22A/WH/DE	150	120-277	0-10V	>80	4000K	Aisle	2x2	19,200	Prm	130	MTO	Daylight/Motion Sensor + Emergency Battery Back-up
65246	LNHIBA2A/150UNVD850/22W/WH/DE	150	120-277	0-10V	>80	5000K	Wide	2x2	19,200	Prm	130	MTO	Daylight/Motion Sensor + Emergency Battery Back-up
65247	LNHIBA2A/150UNVD850/22A/WH/DE	150	120-277	0-10V	>80	5000K	Aisle	2x2	19,200	Prm	130	MTO	Daylight/Motion Sensor + Emergency Battery Back-up
61784	LNHIBA2A/250UNVD840/24W/WH/DE	250	120-277	0-10V	>80	4000K	Wide	2x4	32,500	Prm	130	MTO	Daylight/Motion Sensor + Emergency Battery Back-up
61785	LNHIBA2A/250UNVD840/24A/WH/DE	250	120-277	0-10V	>80	4000K	Aisle	2x4	32,500	Prm	130	MTO	Daylight/Motion Sensor + Emergency Battery Back-up
61786	LNHIBA2A/250UNVD850/24W/WH/DE	250	120-277	0-10V	>80	5000K	Wide	2x4	32,500	Prm	130	MTO	Daylight/Motion Sensor + Emergency Battery Back-up
61787	LNHIBA2A/250UNVD850/24A/WH/DE	250	120-277	0-10V	>80	5000K	Aisle	2x4	32,500	Prm	130	MTO	Daylight/Motion Sensor + Emergency Battery Back-up
61788	LNHIBA2A/300UNVD840/24W/WH/DE	300	120-277	0-10V	>80	4000K	Wide	2x4	38,700	Prm	130	MTO	Daylight/Motion Sensor + Emergency Battery Back-up
61789	LNHIBA2A/300UNVD840/24A/WH/DE	300	120-277	0-10V	>80	4000K	Aisle	2x4	38,700	Prm	130	MTO	Daylight/Motion Sensor + Emergency Battery Back-up
61790	LNHIBA2A/300UNVD850/24W/WH/DE	300	120-277	0-10V	>80	5000K	Wide	2x4	38,700	Prm	130	MTO	Daylight/Motion Sensor + Emergency Battery Back-up
61791	LNHIBA2A/300UNVD850/24A/WH/DE	300	120-277	0-10V	>80	5000K	Aisle	2x4	38,700	Prm	130	MTO	Daylight/Motion Sensor + Emergency Battery Back-up
60524	LNHIBA2A/100UNVD840/12W/WH/E	100	120-277	0-10	>80	4000K	Wide	1x2	12,900	Prm	130	MTO	Emergency Back-Up
60525	LNHIBA2A/100UNVD840/12A/WH/E	100	120-277	0-10	>80	4000K	Aisle	1x2	12,900	Prm	130	MTO	Emergency Back-Up
60526	LNHIBA2A/100UNVD850/12W/WH/E	100	120-277	0-10	>80	5000K	Wide	1x2	12,900	Prm	130	MTO	Emergency Back-Up
60527	LNHIBA2A/100UNVD850/12A/WH/E	100	120-277	0-10	>80	5000K	Aisle	1x2	12,900	Prm	130	MTO	Emergency Back-Up
60528	LNHIBA2A/100UNVD840/14W/WH/E	100	120-277	0-10	>80	4000K	Wide	1x4	12,900	Prm	130	MTO	Emergency Back-Up
60529	LNHIBA2A/100UNVD840/14A/WH/E	100	120-277	0-10	>80	4000K	Aisle	1x4	12,900	Prm	130	MTO	Emergency Back-Up
60530	LNHIBA2A/100UNVD850/14W/WH/E	100	120-277	0-10	>80	5000K	Wide	1x4	12,900	Prm	130	MTO	Emergency Back-Up
60531	LNHIBA2A/100UNVD850/14A/WH/E	100	120-277	0-10	>80	5000K	Aisle	1x4	12,900	Prm	130	MTO	Emergency Back-Up
60532	LNHIBA2A/120UNVD840/12W/WH/E	120	120-277	0-10	>80	4000K	Wide	1x2	15,400	Prm	130	MTO	Emergency Back-Up
60533	LNHIBA2A/120UNVD840/12A/WH/E	120	120-277	0-10	>80	4000K	Aisle	1x2	15,400	Prm	130	MTO	Emergency Back-Up
60534	LNHIBA2A/120UNVD850/12W/WH/E	120	120-277	0-10	>80	5000K	Wide	1x2	15,400	Prm	130	MTO	Emergency Back-Up
60535	LNHIBA2A/120UNVD850/12A/WH/E	120	120-277	0-10	>80	5000K	Aisle	1x2	15,400	Prm	130	MTO	Emergency Back-Up

*Made To Order

Ordering Information (continued)

Item Number	Ordering Abbreviation	Wattage (W)	Input Voltage	Dimming	CRI	Color Temp (CCT)	Distribution	Dimensions	Total Fixture Lumens	DLC	LPW	MTO*	Options
60536	LNHIBA2A/150UNVD840/22W/WH/E	150	120-277	0-10	>80	4000K	Wide	2x2	19,200	Prm	130	MTO	Emergency Back-Up
60537	LNHIBA2A/150UNVD840/22A/WH/E	150	120-277	0-10	>80	4000K	Aisle	2x2	19,200	Prm	130	MTO	Emergency Back-Up
60538	LNHIBA2A/150UNVD850/22W/WH/E	150	120-277	0-10	>80	5000K	Wide	2x2	19,200	Prm	130	MTO	Emergency Back-Up
60539	LNHIBA2A/150UNVD850/22A/WH/E	150	120-277	0-10	>80	5000K	Aisle	2x2	19,200	Prm	130	MTO	Emergency Back-Up
60540	LNHIBA2A/150UNVD840/14W/WH/E	150	120-277	0-10	>80	4000K	Wide	1x4	19,200	Prm	130	MTO	Emergency Back-Up
60541	LNHIBA2A/150UNVD840/14A/WH/E	150	120-277	0-10	>80	4000K	Aisle	1x4	19,200	Prm	130	MTO	Emergency Back-Up
60542	LNHIBA2A/150UNVD850/14W/WH/E	150	120-277	0-10	>80	5000K	Wide	1x4	19,200	Prm	130	MTO	Emergency Back-Up
60543	LNHIBA2A/150UNVD850/14A/WH/E	150	120-277	0-10	>80	5000K	Aisle	1x4	19,200	Prm	130	MTO	Emergency Back-Up
60544	LNHIBA2A/200UNVD840/14W/WH/E	200	120-277	0-10	>80	4000K	Wide	1x4	25,800	Prm	130	MTO	Emergency Back-Up
60545	LNHIBA2A/200UNVD840/14A/WH/E	200	120-277	0-10	>80	4000K	Aisle	1x4	25,800	Prm	130	MTO	Emergency Back-Up
60546	LNHIBA2A/200UNVD850/14W/WH/E	200	120-277	0-10	>80	5000K	Wide	1x4	25,800	Prm	130	MTO	Emergency Back-Up
60547	LNHIBA2A/200UNVD850/14A/WH/E	200	120-277	0-10	>80	5000K	Aisle	1x4	25,800	Prm	130	MTO	Emergency Back-Up
60548	LNHIBA2A/250UNVD840/24W/WH/E	250	120-277	0-10	>80	4000K	Wide	2x4	32,200	Prm	130	MTO	Emergency Back-Up
60549	LNHIBA2A/250UNVD840/24A/WH/E	250	120-277	0-10	>80	4000K	Aisle	2x4	32,200	Prm	130	MTO	Emergency Back-Up
60550	LNHIBA2A/250UNVD850/24W/WH/E	250	120-277	0-10	>80	5000K	Wide	2x4	32,200	Prm	130	MTO	Emergency Back-Up
60551	LNHIBA2A/250UNVD850/24A/WH/E	250	120-277	0-10	>80	5000K	Aisle	2x4	32,200	Prm	130	MTO	Emergency Back-Up
60552	LNHIBA2A/300UNVD840/24W/WH/E	300	120-277	0-10	>80	4000K	Wide	2x4	38,700	Prm	130	MTO	Emergency Back-Up
60553	LNHIBA2A/300UNVD840/24A/WH/E	300	120-277	0-10	>80	4000K	Aisle	2x4	38,700	Prm	130	MTO	Emergency Back-Up
60554	LNHIBA2A/300UNVD850/24W/WH/E	300	120-277	0-10	>80	5000K	Wide	2x4	38,700	Prm	130	MTO	Emergency Back-Up
61791	LNHIBA2A/300UNVD850/24A/WH/E	300	120-277	0-10	>80	5000K	Aisle	2x4	38,700	Prm	130	MTO	Emergency Back-Up
60581	LNHIBA2A/100HUVD840/12W/WH	100	347-480	0-10	>80	4000K	Wide	1x2	12,900	Prm	130	MTO	
60582	LNHIBA2A/100HUVD840/12A/WH	100	347-480	0-10	>80	4000K	Aisle	1x2	12,900	Prm	130	MTO	
60583	LNHIBA2A/100HUVD850/12W/WH	100	347-480	0-10	>80	5000K	Wide	1x2	12,900	Prm	130	MTO	
60584	LNHIBA2A/100HUVD850/12A/WH	100	347-480	0-10	>80	5000K	Aisle	1x2	12,900	Prm	130	MTO	
60585	LNHIBA2A/100HUVD840/14W/WH	100	347-480	0-10	>80	4000K	Wide	1x4	12,900	Prm	130	MTO	
60586	LNHIBA2A/100HUVD840/14A/WH	100	347-480	0-10	>80	4000K	Aisle	1x4	12,900	Prm	130	MTO	
60587	LNHIBA2A/100HUVD850/14W/WH	100	347-480	0-10	>80	5000K	Wide	1x4	12,900	Prm	130	MTO	
60588	LNHIBA2A/100HUVD850/14A/WH	100	347-480	0-10	>80	5000K	Aisle	1x4	12,900	Prm	130	MTO	
60589	LNHIBA2A/120HUVD840/12W/WH	120	347-480	0-10	>80	4000K	Wide	1x2	15,400	Prm	130	MTO	
60590	LNHIBA2A/120HUVD840/12A/WH	120	347-480	0-10	>80	4000K	Aisle	1x2	15,400	Prm	130	MTO	
60591	LNHIBA2A/120HUVD850/12W/WH	120	347-480	0-10	>80	5000K	Wide	1x2	15,400	Prm	130	MTO	
60592	LNHIBA2A/120HUVD850/12A/WH	120	347-480	0-10	>80	5000K	Aisle	1x2	15,400	Prm	130	MTO	
60593	LNHIBA2A/150HUVD840/22W/WH	150	347-480	0-10	>80	4000K	Wide	2x2	19,200	Prm	130	MTO	
60594	LNHIBA2A/150HUVD840/22A/WH	150	347-480	0-10	>80	4000K	Aisle	2x2	19,200	Prm	130	MTO	
60595	LNHIBA2A/150HUVD850/22W/WH	150	347-480	0-10	>80	5000K	Wide	2x2	19,200	Prm	130	MTO	
60596	LNHIBA2A/150HUVD850/22A/WH	150	347-480	0-10	>80	5000K	Aisle	2x2	19,200	Prm	130	MTO	
60597	LNHIBA2A/150HUVD840/14W/WH	150	347-480	0-10	>80	4000K	Wide	1x4	19,200	Prm	130	MTO	
60598	LNHIBA2A/150HUVD840/14A/WH	150	347-480	0-10	>80	4000K	Aisle	1x4	19,200	Prm	130	MTO	
60599	LNHIBA2A/150HUVD850/14W/WH	150	347-480	0-10	>80	5000K	Wide	1x4	19,200	Prm	130	MTO	
60600	LNHIBA2A/150HUVD850/14A/WH	150	347-480	0-10	>80	5000K	Aisle	1x4	19,200	Prm	130	MTO	
60601	LNHIBA2A/200HUVD840/14W/WH	200	347-480	0-10	>80	4000K	Wide	1x4	25,800	Prm	130	MTO	
60602	LNHIBA2A/200HUVD840/14A/WH	200	347-480	0-10	>80	4000K	Aisle	1x4	25,800	Prm	130	MTO	
60603	LNHIBA2A/200HUVD850/14W/WH	200	347-480	0-10	>80	5000K	Wide	1x4	25,800	Prm	130	MTO	
60604	LNHIBA2A/200HUVD850/14A/WH	200	347-480	0-10	>80	5000K	Aisle	1x4	25,800	Prm	130	MTO	
60605	LNHIBA2A/250HUVD840/24W/WH	250	347-480	0-10	>80	4000K	Wide	2x4	32,200	Prm	130	MTO	
60606	LNHIBA2A/250HUVD840/24A/WH	250	347-480	0-10	>80	4000K	Aisle	2x4	32,200	Prm	130	MTO	
60607	LNHIBA2A/250HUVD850/24W/WH	250	347-480	0-10	>80	5000K	Wide	2x4	32,200	Prm	130	MTO	
60608	LNHIBA2A/250HUVD850/24A/WH	250	347-480	0-10	>80	5000K	Aisle	2x4	32,200	Prm	130	MTO	
60609	LNHIBA2A/300HUVD840/24W/WH	300	347-480	0-10	>80	4000K	Wide	2x4	38,700	Prm	130	MTO	
60610	LNHIBA2A/300HUVD840/24A/WH	300	347-480	0-10	>80	4000K	Aisle	2x4	38,700	Prm	130	MTO	
60611	LNHIBA2A/300HUVD850/24W/WH	300	347-480	0-10	>80	5000K	Wide	2x4	38,700	Prm	130	MTO	
60612	LNHIBA2A/300HUVD850/24A/WH	300	347-480	0-10	>80	5000K	Aisle	2x4	38,700	Prm	130	MTO	

*Made To Order

Photometric Information

LNHIBA2A-100UNVD840-12W_20FT

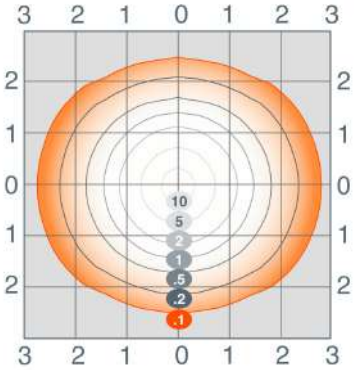

LNHIBA2A-120UNVD840-12W_20FT

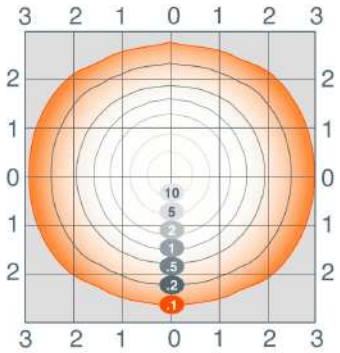

LNHIBA2A-150UNVD840-14W_20FT

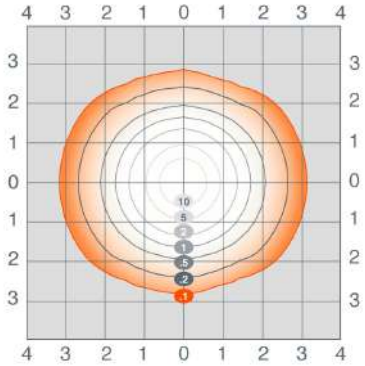

LNHIBA2A-200UNVD840-14W_20FT

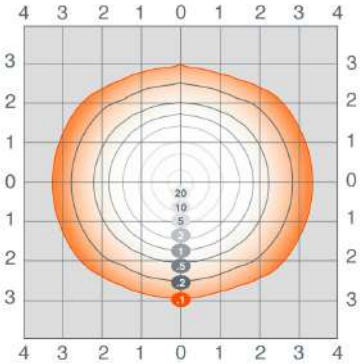

LNHIBA2A-250UNVD840-24W_20FT

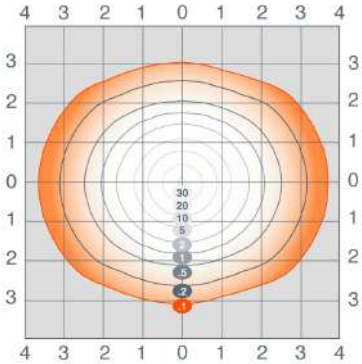

LNHIBA2A-300UNVD840-24W_20FT

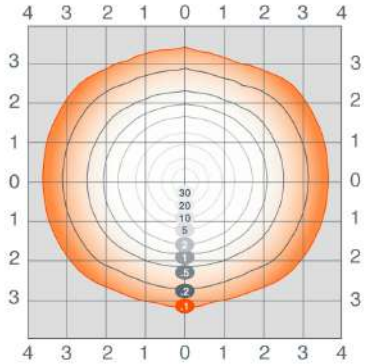

For other mounting heights apply the following multipliers:

Mounting Height	15'	18'	20'	22'	25'	30'
Multiplier	1.78	1.23	1.00	0.83	0.64	0.44

Physical Information

Lamp Description	(A) Length	(B) Width	(C) Height	Wattages
1x2	23.7	12.7	2.4	100, 120
1x4	45.9	12.7	2.4	100, 150, 200
2x2	23.7	23.7	2.4	150
2x4	45.9	23.7	2.4	250, 300

Weight: 100W (1x2): 9lbs (4.1kg); 100W (1x4): 12.5lbs (5.7kg); 120W: 9.25lbs (4.2kg); 150W (2x2): 11.5lbs (5.2kg); 150W (1x4): 13.7lbs (6.2kg); 200W: 16.2lbs (7.3kg); 250W: 18.1lbs (8.2kg); 300W: 20.3lbs (9.2kg)

1x2

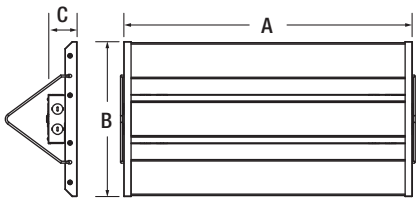

1x4

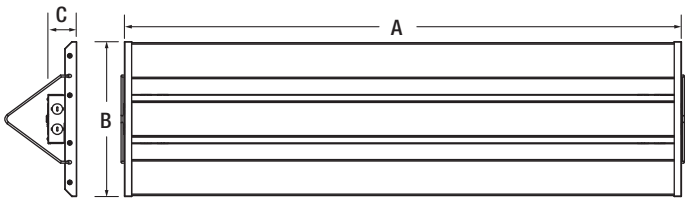

2x2

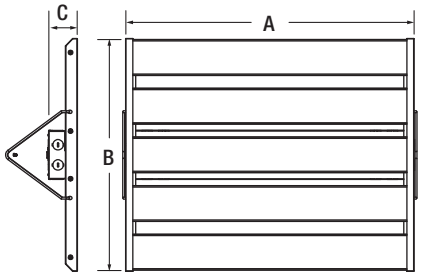

2x4

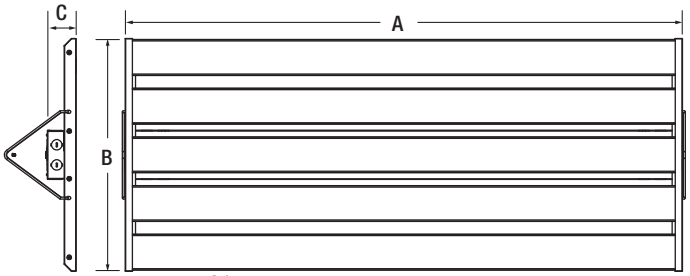

Accessories

Item Number	Ordering Abbreviation	Item Description
60573	LNHIBA2A/CHAINMT	Chain Mount (5 foot)
60574	LNHIBA2A/ACCABLEMT	Cable Mount (5 foot)
60575	LNHIBA2A/MTGBRACKET/WH	Surface and Pendant mounting bracket with white finish
60577	LNHIBA2A/12/WG/WH	1x2 Wire Guard
60578	LNHIBA2A/22/WG/WH	2x2 Wire Guard
60579	LNHIBA2A/14/WG/WH	1x4 Wire Guard
60580	LNHIBA2A/24WG/WH	2x4 Wire Guard
60105	HIBAY2A/REMOTE	Sensor Remote (functional up to 49ft (15m))

Luminaire installed with cable mount (60574)

Options Information

Motion	100% Lumen output
≥5 min no motion	30% Lumen output
≥60 min no motion	Off Lumen output

Sensor Type: Dual Motion/Daylight sensor available.

Stand-by power: <1W

Detection area options: 25%/50%/75%/100%*

Hold time options: 5s/30s/1min/3min/5min/10min/20min/30min

Daylight threshold options: 2Lux/10Lux/30Lux/50Lux 80Lux/120Lux/Disable

Stand-by period options: 0s/10s/30s/1min/5min/10min/30min/+∞

Mounting height: Max – 49ft (15m)

Dimming Level: 10%, 20%, 30%, 50%

*25% and 50% can only be accessed via the remote (NAED 60105).

Default Sensor Settings

Sensitivity: 100%
Dimming Percentage: 30%
Hold Time: 5 minutes
Dimming Time: 60 minutes
Daylight Threshold: 5fc

Emergency Battery Back-up

Emergency Battery Back-Up versions activate when normal power supply to the fixture fails, providing 1,000 lumens for 90 minutes.

Detection Range*

Typical installation height 8-15m.

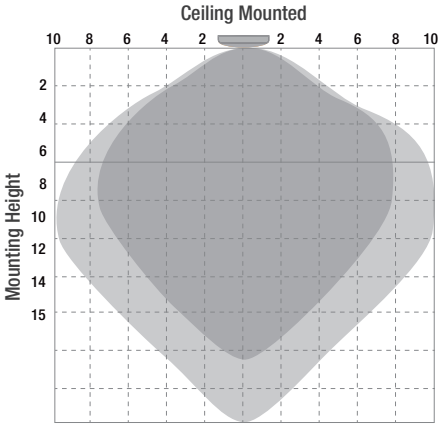

*Dark grey denotes maximum sensitivity
Light grey denotes decreased sensitivity

Graph is shown at 100% detection range; units are shown in meters.

DIP Switch Settings

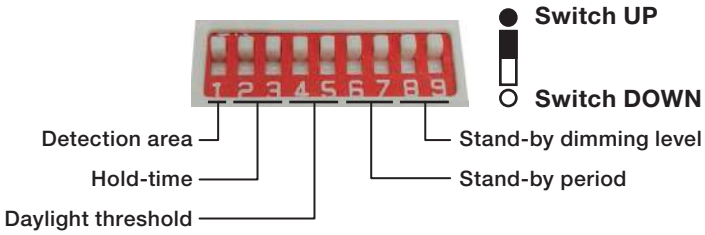

●	100%
○	50%

Detection area

Detection area means detection coverage. It can be adjusted by combining DIP switches for specific application.

●	●	5s
○	●	30s
●	○	1min
○	○	5min

Hold-time

Hold-time means the time period the light will be ON after the last detection.

●	●	Disable
○	●	50lux
●	○	10lux
○	○	2lux

Daylight threshold

Daylight sensor prior to motion sensor. Set threshold for specific needs. If disabled, only motion sensor works.

●	●	0s
○	●	30s
●	○	60min
○	○	+∞

Stand-by period

This is the time period the light keeps dimming down after the last detection.

●	●	10%
○	●	20%
●	○	30%
○	○	50%

Stand-by dimming level

This is the dimming level the light keeps during stand-by period.

Remote control setting and DIP switch setting shift

If the sensor was last set by the DIP switch, all settings will follow the DIP switch setting regardless of whether any key was changed. For example: when user changes the detection range by changing switch 1 and 2, all other settings (hold time, stand-by period, daylight sensor, stand-by dimming level) will follow the DIP switch setting even though user did not change them.

If user changes any setting by remote control, the setting will be changed by the relevant button only; other settings will remain. For example: when user changes the hold time by pressing the hold time buttons, only the hold time will be changed; other settings (detection range, stand-by period, daylight sensor, stand-by dimming level) will follow the DIP switch setting.

LEDVANCE LLC
200 Ballardvale Street
Wilmington, MA 01887 USA
Phone 1-800-LIGHTBULB (1-800-544-4828)
www.sylvania.com

Name:
Email:
Phone:

SYLVANIA and LEDVANCE are registered trademarks.
All other trademarks are those of their respective owners.
Licensee of product trademark SYLVANIA in general lighting.
Specifications subject to change without notice.

/sylvania /sylvania

© 2020 LEDVANCE LLC

SYLVANIA Luminaires

UltraLED™ Strip

Catalog #	Type
Project	
Notes	
Date	
Prepared by	

Dimensions

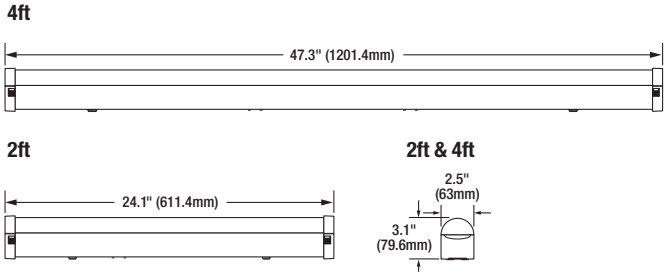

Product Features

- Snap fit for quick, and easy tool-less access
- End-to-end linkable for customized run lengths
- Offered in three wattages/lumen packages and two lengths
- Application: retail, manufacturing, warehouse, office, education and low bay applications

Wattage Comparison Chart

Strip Traditional Source	Traditional System Wattage	LED System Wattage	Energy Savings
1x28W Fluorescent	25	16	36%
1x32W Fluorescent	28	16	43%
2x28W Fluorescent	49	32	35%
2x32W Fluorescent	56	32	43%
3x28W Fluorescent	64	47	27%
3x32W Fluorescent	75	47	37%
4x28W Fluorescent	97	47	52%
4x32W Fluorescent	116	47	59%

Specifications

Weight: 2ft: 2.1 lbs (1.0 kg) 4ft: 4.0 lbs (1.8 kg)

Construction: Sheet metal housing with powder coat paint finish and polycarbonate lens. The standard color is white.

LED System: LED system with a life rating of ≥50,000 hours at L_{70} @25°C. Luminaire efficacy up to 127 LPW.

Electrical: Offered in 16, 32, and 47 Watts, the luminaire is designed to operate through the 120-277 VAC voltage. The LED driver has a 4kV surge suppression and is a constant current device, meeting UL1310 and UL48 Class 1 with built-in over temperature protection. The power factor is ≥90% and THD is ≤20%.

Dimming: The driver is 0-10V dimmable (down to 10%). Please reference the compatibility document (LEDLUM012).

Color Characteristics: CRI>80; CCT of 3500K, 4000K or 5000K.

Optics: Diffuse polycarbonate lens.

Installation: Luminaire is surface or suspension mounted.

Operating Temperature: -13°F to +104°F (-25°C to +40°C).

Listings: cETLus listed to UL1598 standards and for damp locations.

Note: Suitable for use in closets, compliant with NFPA 70, NEC section 410.16 (A)(3) and 410.16 (C)(5).

Warranty: Standard 5-year luminaire warranty (LEDLUM001).

Note: Specifications subject to change without notice. IES files available online.

Ordering Guide

Item Number:

STRIP	1A	/	XXX	UNV	D	8	XX	/	XX	S	/	WH
Product Name STRIP	Generation 1A		Wattage 016 = 16 Watts 032 = 32 Watts 047 = 47 Watts	Voltage UNV = 120-277V	Dimming D = 0-10V	CRI 8 ≥80	Color Temp (CCT) 35 = 3500K 40 = 4000K 50 = 5000K		Dimensions 24 = 24 in 48 = 48 in	Mounting S = Surface		Color/Finish WH = White

Photometric Data

Average Illuminance (FC) at 30" AFF and avg/min uniformity
80/50/20 Reflectances*

		7 ft Mounting Height			10 ft Mounting Height			13 ft Mounting Height		
		On Center Luminaire Spacing								
		8'x10'	10'x10'	10'x12'	8'x10'	10'x10'	10'x12'	8'x10'	10'x10'	10'x12'
2 ft 16W	70525	23fc/1.4	19fc/1.2	17fc/1.6	22fc/1.5	18fc/1.4	16fc/1.3	20fc/1.6	17fc/1.5	15fc/1.3
	70526									
	70527									
4 ft 32W	74774	49fc/1.38	40fc/1.2	35fc/1.6	47fc/1.5	39fc/1.4	34fc/1.3	44fc/1.6	36fc/1.5	32fc/1.3
	74775									
	74776									
4 ft 47W	70522	76fc/1.4	62fc/1.2	55fc/1.5	72fc/1.5	60fc/1.4	52fc/1.3	67fc/1.6	56fc/1.5	49fc/1.2
	70523									
	70524									

		12 ft Mounting Height*			16 ft Mounting Height*			20 ft Mounting Height*		
		Continuous Rows								
		16ft on center	18ft on center	20ft on center	16ft on center	18ft on center	20ft on center	16ft on center	18ft on center	20ft on center
4 ft 32W	74774	56fc/1.7	55fc/1.5	53fc/1.5	51fc/1.7	50fc/1.5	49fc/1.4	47fc/1.6	46fc/1.5	45fc/1.4
	74775									
	74776									
4 ft 47W	70522	86fc/1.7	85fc/1.5	82fc/1.5	79fc/1.7	77fc/1.5	75fc/1.4	72fc/1.7	71fc/1.6	69fc/1.5
	70523									
	70524									

*Continuous rows within a room with no objects or obstructions.

Ordering Information

Item Number	Ordering Abbreviation	Power (W)	Input Voltage	Dimming	CRI	Color Temp (CCT)	Size	Total Fixture Lumens	LPW*	DLC**
70525	STRIP1A/016UNVD835/24S/WH	16	120-277V	0-10V	>80	3500K	2ft	2000	124	Std
70526	STRIP1A/016UNVD840/24S/WH	16	120-277V	0-10V	>80	4000K	2ft	1900	119	Std
70527	STRIP1A/016UNVD850/24S/WH	16	120-277V	0-10V	>80	5000K	2ft	2000	122	Std
74774	STRIP1A/032UNVD835/48S/WH	32	120-277V	0-10V	>80	3500K	4ft	3900	121	Std
74775	STRIP1A/032UNVD840/48S/WH	32	120-277V	0-10V	>80	4000K	4ft	4000	127	Std
74776	STRIP1A/032UNVD850/48S/WH	32	120-277V	0-10V	>80	5000K	4ft	4000	124	Std
70522	STRIP1A/047UNVD835/48S/WH	47	120-277V	0-10V	>80	3500K	4ft	5900	123	Std
70523	STRIP1A/047UNVD840/48S/WH	47	120-277V	0-10V	>80	4000K	4ft	6200	126	Std
70524	STRIP1A/047UNVD850/48S/WH	47	120-277V	0-10V	>80	5000K	4ft	6000	124	Std

*LPW per LM79 report
**Std for DLC Standard.

Accessories and Replacement Parts

Item Number	Ordering Abbreviation	Item Description
60000	STRIP1A/JOINERKIT/WH	Strip Connector, White Finish (Does not provide structural support to allow suspension mounting >4ft between mounting locations)
60456	STRIP1A/KOENDCAP	Strip End Cap with Knockout, White Finish

NAED 60000

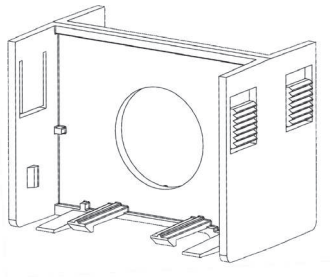

NAED 60456

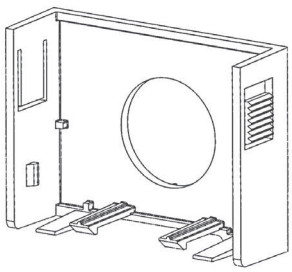

LEDVANCE LLC
200 Ballardvale Street
Wilmington, MA 01887 USA
Phone 1-800-LIGHTBULB (1-800-544-4828)
www.sylvania.com

SYLVANIA and LEDVANCE are registered trademarks.
All other trademarks are those of their respective owners.
Licensee of product trademark SYLVANIA in general lighting.
Specifications subject to change without notice.

/sylvania /sylvania

© 2019 LEDVANCE LLC

SYLVANIA Luminaires

ValueLED™ Strip Retrofit

Item #	
Type	
Project	
Notes	
Date	

Application

Ideal in fluorescent strip retrofit applications including: retail, manufacturing, warehouse, office, education, and other low bay applications.

Benefits and Features

- Offers a cost-effective and energy efficient retrofit for fluorescent strip fixtures
- Attaches to standard 4.25" to 5.25" wide fluorescent strip bodies
- Available in 4ft or 8ft kits
- DLC Premium listing for all models maximizes rebate opportunities
- Easy installation
- Up to 136 LPW
- 3500K, 4000K, and 5000K color temperatures
- CRI >80
- Offered in 25, 30, 46, and 54 watts
- Energy savings up to 72%
- Emergency battery back-up versions available

Electrical

- 120-277 VAC
- Power Factor >90%
- THD <20%
- 0-10V dimmable down to 10%

Rated Life

- Life rating of ≥150,000 hours (at L_{70} at 40°C)

Warranty

- 5-year

Ambient Operating Range

- -4°F to +122°F (-20°C to +50°C)

Certifications and Listings

- cULus
- RoHS
- FCC
- DLC

Wattage Comparison

Traditional Source	Traditional System Wattage	LED System Wattage	Energy Savings
2x28W Fluorescent	49	25	49%
2x32W Fluorescent	56	25	55%
3x28W Fluorescent	64	30	53%
3x32W Fluorescent	75	30	60%
4x28W Fluorescent	97	30	69%
4x32W Fluorescent	108	30	72%
1x96W Fluorescent	86	46	47%
2x96W Fluorescent	172	54	69%

Installation

- Luminaire is intended for retrofit applications over existing 4' and 8' fluorescent strip fixtures

Ordering Guide

RSTRIP	1A	/	XX	UNV	D	8	XX	/	XX	U	/	WH
Product Name RSTRIP = Retrofit Strip	Generation 1A		Wattage 25 = 25 Watts 30 = 30 Watts 46 = 46 Watts 54 = 54 Watts	Voltage UNV = 120-277V	Dimming D = 0-10V	CRI 8 = >80	Color Temp (CCT) 35 = 3500K 40 = 4000K 50 = 5000K		Length 48 = 48 inches 96 = 96 inches	Mounting U = Universal Mounting		Color/Finish WH = White

Ordering Information

Item Number	Ordering Abbreviation	Wattage	Input Voltage	Dimming	CRI	Color Temp	Total Fixture Lumens	LPW	Length (inches)	DLC	Options
61471	RSTRIP1A/025UNVD835/48U/WH	25	120-277	0-10V	80	3500K	3250	130	48	Prm	–
61472	RSTRIP1A/025UNVD840/48U/WH	25	120-277	0-10V	80	4000K	3300	132	48	Prm	–
61473	RSTRIP1A/025UNVD850/48U/WH	25	120-277	0-10V	80	5000K	3325	133	48	Prm	–
61474	RSTRIP1A/030UNVD835/48U/WH	30	120-277	0-10V	80	3500K	3960	132	48	Prm	–
61475	RSTRIP1A/030UNVD840/48U/WH	30	120-277	0-10V	80	4000K	4020	134	48	Prm	–
61476	RSTRIP1A/030UNVD850/48U/WH	30	120-277	0-10V	80	5000K	4080	136	48	Prm	–
61477	RSTRIP1A/046UNVD835/96U/WH	46	120-277	0-10V	80	3500K	5980	130	96	Prm	–
61478	RSTRIP1A/046UNVD840/96U/WH	46	120-277	0-10V	80	4000K	6070	132	96	Prm	–
61479	RSTRIP1A/046UNVD850/96U/WH	46	120-277	0-10V	80	5000K	6115	133	96	Prm	–
61480	RSTRIP1A/054UNVD835/96U/WH	54	120-277	0-10V	80	3500K	7125	132	96	Prm	–
61481	RSTRIP1A/054UNVD840/96U/WH	54	120-277	0-10V	80	4000K	7230	134	96	Prm	–
61482	RSTRIP1A/054UNVD850/96U/WH	54	120-277	0-10V	80	5000K	7340	136	96	Prm	–
61483	RSTRIP1A/025UNVD835/48U/WH/E	25	120-277	0-10V	80	3500K	3250	130	48	Prm	Emergency
61484	RSTRIP1A/025UNVD840/48U/WH/E	25	120-277	0-10V	80	4000K	3300	132	48	Prm	Emergency
61485	RSTRIP1A/025UNVD850/48U/WH/E	25	120-277	0-10V	80	5000K	3325	133	48	Prm	Emergency
61486	RSTRIP1A/030UNVD835/48U/WH/E	30	120-277	0-10V	80	3500K	3960	132	48	Prm	Emergency
61487	RSTRIP1A/030UNVD840/48U/WH/E	30	120-277	0-10V	80	4000K	4020	134	48	Prm	Emergency
61488	RSTRIP1A/030UNVD850/48U/WH/E	30	120-277	0-10V	80	5000K	4080	136	48	Prm	Emergency
61489	RSTRIP1A/046UNVD835/96U/WH/E	46	120-277	0-10V	80	3500K	5980	130	96	Prm	Emergency
61490	RSTRIP1A/046UNVD840/96U/WH/E	46	120-277	0-10V	80	4000K	6070	132	96	Prm	Emergency
61491	RSTRIP1A/046UNVD850/96U/WH/E	46	120-277	0-10V	80	5000K	6115	133	96	Prm	Emergency
61492	RSTRIP1A/054UNVD835/96U/WH/E	54	120-277	0-10V	80	3500K	7125	132	96	Prm	Emergency
61493	RSTRIP1A/054UNVD840/96U/WH/E	54	120-277	0-10V	80	4000K	7230	134	96	Prm	Emergency
61494	RSTRIP1A/054UNVD850/96U/WH/E	54	120-277	0-10V	80	5000K	7340	136	96	Prm	Emergency

Photometric Data

Average Illuminance (FC) at 30" AFF and avg/min uniformity
80/50/20 Reflectances*

	7 ft Mounting Height			10 ft Mounting Height			13 ft Mounting Height		
	On Center Luminaire Spacing								
	8'x10'	10'x10'	10'x12'	8'x10'	10'x10'	10'x12'	8'x10'	10'x10'	10'x12'
4 ft 25W	39.1fc/1.4	32.6fc/1.2	29.5fc/1.8	38.3fc/1.5	32fc/1.4	28.1fc/1.3	35.8fc/1.6	29.9fc/1.5	26.1fc/1.3
4 ft 30W	50.7fc/1.4	41.6fc/1.2	36.7fc/1.7	48.2fc/1.5	40.2fc/1.4	35fc/1.3	44.9fc/1.6	37.4fc/1.5	32.6fc/1.2
8 ft 46W	77.8fc/1.4	66.4fc/1.2	61.1fc/1.9	75.6fc/1.5	63.4fc/1.4	55.6fc/1.4	70.8fc/1.6	59.2fc/1.5	51.6fc/1.3
8 ft 54W	100.8fc/1.3	86.3fc/1.2	76.2fc/1.8	95.3fc/1.5	80fc/1.4	69.7fc/1.3	89.4fc/1.6	74.5fc/1.5	64.8fc/1.3

	12 ft Mounting Height*			16 ft Mounting Height*			20 ft Mounting Height*		
	Continuous Rows								
	16ft	18ft	20ft	16ft	18ft	20ft	16ft	18ft	20ft
4 ft 25W or 8ft 46W	47fc/1.8	46.2fc/1.5	44.6fc/1.6	43.3fc/1.7	42.5fc/1.5	40.9fc/1.4	39.8fc/1.7	39fc/1.5	37.5fc/1.4
4 ft 30W or 8ft 54W	59fc/1.8	57.9fc/1.5	56.1fc/1.6	54.4fc/1.7	53.3fc/1.5	51.4fc/1.4	50fc/1.6	49fc/1.5	47.1fc/1.4

*Continuous rows within a room with no objects or obstructions.

Physical Information

Luminaire Description	Length	Width	Height	Weight
4 foot	48"	5.8"	2.4"	5.83lbs (2.4kg)
8 foot	96"	5.8"	2.4"	9.26lbs (4.2kg)

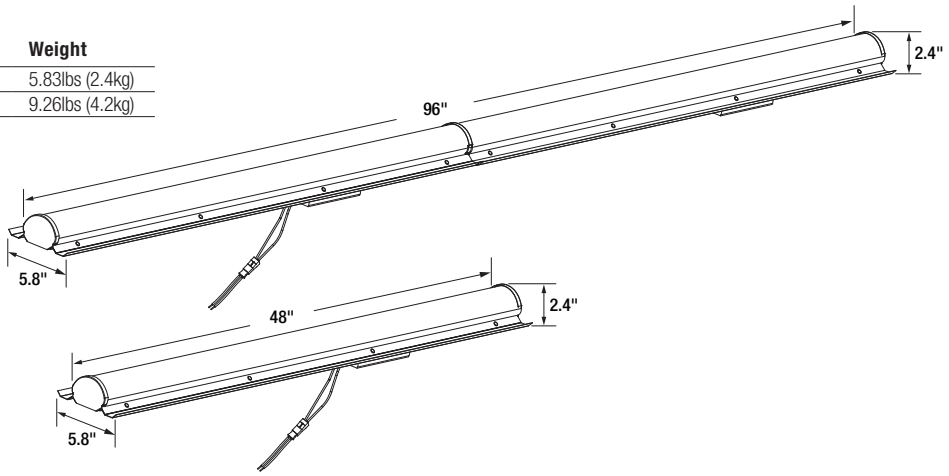

Sensor Information

Recommended Sensor: Wattstopper™ FSP-2x1B Series
Note: Sensors must be attached to existing linear strip body. Please reference the compatibility document (LEDLUM012) for further information.

Emergency Battery Backup

Minimum to 10% of rated wattage in backup mode >90 minutes.

LEDVANCE LLC
200 Ballardvale Street
Wilmington, MA 01887 USA
Phone 1-800-LIGHTBULB (1-800-544-4828)
www.sylvania.com

Name:
Email:
Phone:

SYLVANIA and LEDVANCE are registered trademarks.
All other trademarks are those of their respective owners.
Licensee of product trademark SYLVANIA in general lighting.
Specifications subject to change without notice.

/sylvania /sylvania

© 2020 LEDVANCE LLC

SYLVANIA Luminaires

UltraLED™ Wrap

Catalog #	Type
Project	
Notes	
Date	
Prepared by	

Dimensions

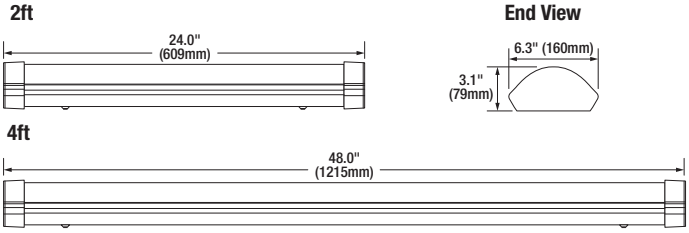

Product Features

- Tool-less entry allows for quick and easy installation
- Diffuse lens for even light output without light leaks or shadows
- Modern, low profile form updates from traditional designs
- Offered in two high efficacy wattages/lumen packages and two lengths and allow extra enegry savings compared to traditional sources
- Applications: Retail, manufacturing, warehouse, office, education and low bay applications

Specifications

Weight: 2ft: 3.7 lbs (1.7 kg) 4ft: 6.5 lbs (2.9 kg)

Construction: Sheet metal housing with powder coat paint finish and polycarbonate lens. The standard color is white.

LED System: LED system with a life rating of ≥50,000 hours at L_{70} @25°C. Luminaire efficacy up to 120 LPW.

Electrical: Offered in 18 and 26 Watts, the luminaire is designed to operate through the 120-277 VAC voltage. The LED driver has a 4kV surge suppression and is a constant current device, meeting UL1310 and UL48 Class 1 with built-in over temperature protection. The power factor is ≥90% and THD is ≤20%.

Dimming: The driver is 0-10V dimmable (down to 10%). Please reference the compatibility document (LEDLUM012).

Color Characteristics: CRI>80; CCT of 3500K, 4000K or 5000K.

Optics: Diffuse polycarbonate lens.

Installation: Luminaire is surface mounted or suspended.

Operating Temperature: -4°F to +104°F (-20°C to +40°C).

Listings: cETLus listed to UL1598 standards and for damp locations.

Note: Suitable for use in closets, compliant with NFPA 70, NEC section 410.16 (A)(3) and 410.16 (C)(5).

Warranty: Standard 5-year luminaire warranty (LEDLUM001).

Note: Specifications subject to change without notice. IES files available online.

Ordering Guide

Item Number:

WRAP	1A	/	XXX	UNV	D	8	XX	/	XX	S	/	WH
Product Name WRAP	Generation 1A		Wattage 018 = 18 Watts 026 = 26 Watts	Voltage UNV = 120-277V	Dimming D = 0-10V	CRI 8 ≥80	Color Temp (CCT) 35 = 3500K 40 = 4000K 50 = 5000K		Dimensions 24 = 24 in 48 = 48 in	Mounting S = Surface		Color/Finish WH = White

Photometric Data

Average Illuminance (FC) at 30" AFF and avg/min uniformity
80/50/20 Reflectances

			8 ft Mounting Height			10 ft Mounting Height			12 ft Mounting Height		
			On Center Fixture Spacing			On Center Fixture Spacing			On Center Fixture Spacing		
			8'x10'	10'x10'	10'x12'	8'x10'	10'x10'	10'x12'	8'x10'	10'x10'	10'x12'
2ft	18W	WRAP1A/018UNVD8XX/24S/WH	28fc/1.4	23fc/1.3	21fc/1.5	27fc/1.5	23fc/1.4	20fc/1.3	26fc/1.6	22fc/1.5	19fc/1.3
4ft	26W	WRAP1A/026UNVD8XX/48S/WH	41fc/1.4	34fc/1.2	30fc/1.5	40fc/1.5	33fc/1.4	28fc/1.3	38fc/1.6	31fc/1.5	27fc/1.2

Ordering Information

Item Number	Ordering Abbreviation	Power (W)	Input Voltage	Dimming	CRI	Color Temp (CCT)	Size	Total Fixture Lumens	LPW*	DLC**
74781	WRAP1A/018UNVD835/24S/WH	18	120-277	0-10V	>80	3500K	2ft	2160	120	Std
74782	WRAP1A/018UNVD840/24S/WH	18	120-277	0-10V	>80	4000K	2ft	2160	120	Std
74783	WRAP1A/018UNVD850/24S/WH	18	120-277	0-10V	>80	5000K	2ft	2160	120	Std
74778	WRAP1A/026UNVD835/48S/WH	26	120-277	0-10V	>80	3500K	4ft	3120	120	Std
74779	WRAP1A/026UNVD840/48S/WH	26	120-277	0-10V	>80	4000K	4ft	3120	120	Std
74780	WRAP1A/026UNVD850/48S/WH	26	120-277	0-10V	>80	5000K	4ft	3120	120	Std

*LPW per LM79 report
**Std for DLC Standard

LEDVANCE LLC
200 Ballardvale Street
Wilmington, MA 01887 USA
Phone 1-800-LIGHTBULB (1-800-544-4828)
www.sylvania.com

SYLVANIA and LEDVANCE are registered trademarks.
All other trademarks are those of their respective owners.
Licensee of product trademark SYLVANIA in general lighting.
Specifications subject to change without notice.

/sylvania /sylvania

© 2019 LEDVANCE LLC

SYLVANIA Luminaires

10" Canopy

Catalog #	Type
Project	
Notes	
Date	
Prepared by	

Dimensions

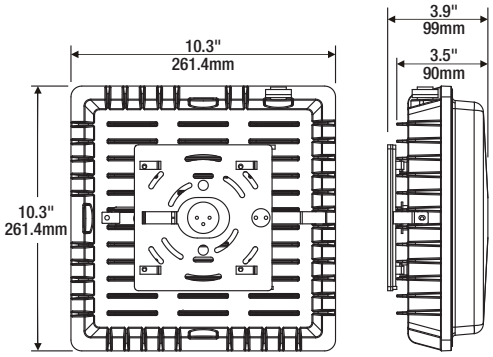

Product Features

- Slim, lightweight design
- Easy to install with hinged mounting plate
- Durable housing with an IP66 rating
- Energy savings of up to 79% compared to traditional sources
- High efficacy meets DLC Premium requirements

Wattage Comparison Chart

Traditional Source	Traditional System Wattage	LED System Wattage	Energy Savings
35 W HPS	42	20	52%
50 W HPS	62	20	68%
70 W HPS	91	20	67%
70 W HPS	91	40	56%
100 W HPS	120	40	67%
100 W MH	130	40	69%
150 W HPS	170	40	76%
150 W MH	188	40	79%
150 W HPS	170	55	68%
150 W MH	188	55	71%
175 W MH	210	55	74%

Specifications

Weight: 5.7 lbs (2.3kg)

Construction: Die Cast aluminum housing with powder coat paint. The standard colors are bronze or white.

LED System: LED system with a life rating of >150,000 hours at L_{70} @ 25°C. Luminaire efficacy up to 127 LPW.

Electrical: Offered in 20, 40, and 55 watts, the luminaire is designed to operate through the 120-277 VAC universal voltage range. Offered in 40 and 55 watts, the luminaire is designed to operate at the 347 VAC voltage range. The LED driver is a constant current device. The power factor is ≥90% and THD is ≤20%.

Color Characteristics: CRI >70; CCT of 4000K or 5000K.

Optics: Type V distribution with UV resistant polycarbonate lens.

Installation: Luminaire mounts to recessed outlet box or can be pendant mounted (accessories not included).

Operating Temperature: -40°F to +122°F (-40°C to +50°C).

Listings: cULus classified to UL1598 rated for wet locations. IP66 rated. DLC Premium listed for fuel pump canopy applications.

Warranty: Standard 5-year luminaire warranty (LEDLUM001).

Note: Specifications subject to change without notice. IES files available online.

c UL us LISTED

Ordering Guide

Item Number:

CANOPY	3A	/	XXX	XXX	7	XX	/	10S	5	/	XX
Product Name CANOPY	Generation 3A		Wattage (UNV) 020 = 20 Watts 040 = 40 Watts 055 = 55 Watts Wattage (347V) 040 = 40 Watts 055 = 55 Watts	Voltage UNV = 120-277V 347 = 347V	CRI 7 = >80	Color Temp (CCT) 40 = 4000K 50 = 5000K		Shape 10S = 10" Square	Distribution 5 = Type V		Color Finish BZ = Bronze WH = White

Ordering Information

Item Number	Ordering Abbreviation	Finish	Wattage	Voltage	CRI	CCT	Lumens	LPW*	DLC**	MTO***
60151	CANOPY3A/020UNV740/10S5/WH	White	20	120-277	>70	4000K	2000	110	Prm	
60152	CANOPY3A/020UNV750/10S5/WH	White	20	120-277	>70	5000K	2000	110	Prm	
60153	CANOPY3A/040UNV740/10S5/WH	White	40	120-277	>70	4000K	4700	125	Prm	
60154	CANOPY3A/040UNV750/10S5/WH	White	40	120-277	>70	5000K	4700	125	Prm	
60559	CANOPY3A/040347740/10S5/WH	White	40	347	>70	4000K	4700	125	Prm	MTO
60560	CANOPY3A/040347750/10S5/WH	White	40	347	>70	5000K	4700	125	Prm	MTO
60155	CANOPY3A/055UNV740/10S5/WH	White	55	120-277	>70	4000K	6800	127	Prm	
60156	CANOPY3A/055UNV750/10S5/WH	White	55	120-277	>70	5000K	6800	127	Prm	
60561	CANOPY3A/055347740/10S5/WH	White	55	347	>70	4000K	6800	127	Prm	MTO
60562	CANOPY3A/055347750/10S5/WH	White	55	347	>70	5000K	6800	127	Prm	MTO
60157	CANOPY3A/020UNV740/10S5/BZ	Bronze	20	120-277	>70	4000K	2000	110	Prm	
60158	CANOPY3A/020UNV750/10S5/BZ	Bronze	20	120-277	>70	5000K	2000	110	Prm	
60159	CANOPY3A/040UNV740/10S5/BZ	Bronze	40	120-277	>70	4000K	4700	125	Prm	
60160	CANOPY3A/040UNV750/10S5/BZ	Bronze	40	120-277	>70	5000K	4700	125	Prm	
60555	CANOPY3A/040347740/10S5/BZ	Bronze	40	347	>70	4000K	4700	125	Prm	MTO
60556	CANOPY3A/040347750/10S5/BZ	Bronze	40	347	>70	5000K	4700	125	Prm	MTO
60161	CANOPY3A/055UNV740/10S5/BZ	Bronze	55	120-277	>70	4000K	6800	127	Prm	
60162	CANOPY3A/055UNV750/10S5/BZ	Bronze	55	120-277	>70	5000K	6800	127	Prm	
60557	CANOPY3A/055347740/10S5/BZ	Bronze	55	347	>70	4000K	6800	127	Prm	MTO
60558	CANOPY3A/055347750/10S5/BZ	Bronze	55	347	>70	5000K	6800	127	Prm	MTO

*LPW per LM79 report
**Prm for DLC Premium
***Made To Order

Photometric Data

20W CANOPY3A/020UNV740/10S5
Isofootcandle Lines at 10' Mounting Height

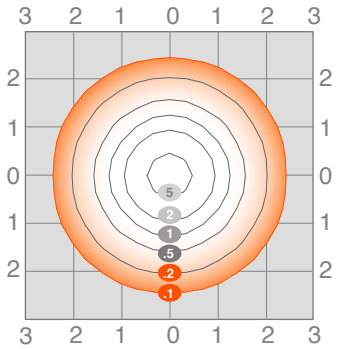

40W CANOPY3A/040UNV740/10S5
Isofootcandle Lines at 10' Mounting Height

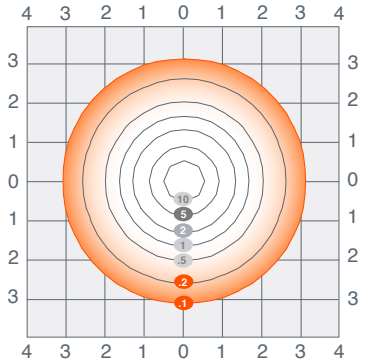

55W CANOPY3A/055UNV740/10S5
Isofootcandle Lines at 10' Mounting Height

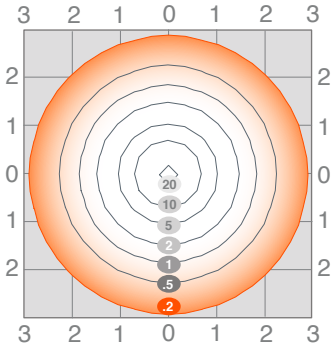

For other mounting heights apply the following multipliers:

Mounting Height	6'	8'	10'	12'	15'
Multiplier	2.8	1.6	1.00	0.69	0.44

Mounting Accessories

Item Number	Ordering Abbreviation	Item Description
60683	CANOPY3A/MTGPLATE/12/BZ	12.5" Mounting Plate, Bronze
60684	CANOPY3A/MTGPLATE/16/BZ	16" Mounting Plate, Bronze
60685	CANOPY3A/MTGPLATE/12/WH	12.5" Mounting Plate, White
60686	CANOPY3A/MTGPLATE/16/WH	16" Mounting Plate, White

12.5 Inch

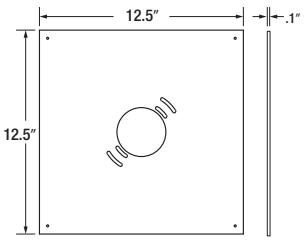

16 Inch

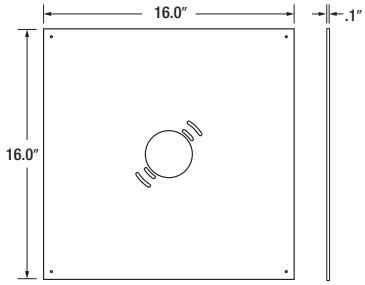

LEDVANCE LLC
200 Ballardvale Street
Wilmington, MA 01887 USA
Phone 1-800-LIGHTBULB (1-800-544-4828)
www.sylvania.com

SYLVANIA and LEDVANCE are registered trademarks.
All other trademarks are those of their respective owners.
Licensee of product trademark SYLVANIA in general lighting.
Specifications subject to change without notice.

/sylvania /sylvania

© 2019 LEDVANCE LLC

SYLVANIA Luminaires

Canopy

Catalog #	Type
Project	
Notes	
Date	
Prepared by	

Dimensions

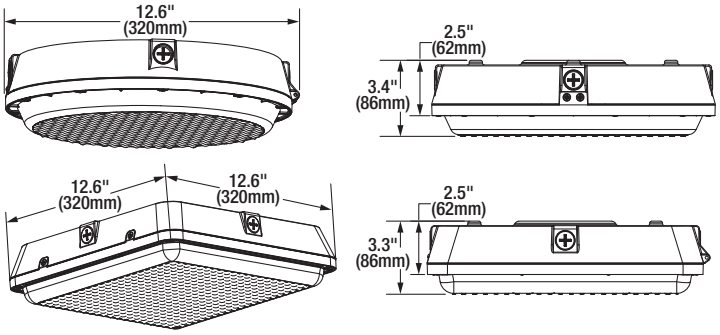

Product Features

The Canopy luminaires are environmentally preferable LED alternatives to traditional HID luminaires, offering up to 81% in energy savings. Ideal in place of traditional luminaires, or as new installations, the Canopy series is offered in four wattages/lumen packages for illuminating building exteriors, outdoor corridors, walkways, and stairwells.

The extremely durable IP66 luminaires allow for easy installation in tight ceiling spaces, and are available in two shapes and finishes. SYLVANIA luminaires assure optimum light engine performance for extended service and rated life (≥150,000 hours L_{70}).

Wattage Comparison Chart

Traditional Source	Traditional System Wattage	LED System Wattage	Energy Savings
35W HPS	42	25	40%
50W HPS	62	25	60%
70W HPS	91	25	67%
70W HPS	91	35	62%
100W HPS	120	35	71%
100W MH	130	35	73%
150W HPS	170	35	79%
150W MH	188	35	81%
150W HPS	170	45	74%
150W MH	188	45	76%
175W MH	210	45	79%
175W MH	210	65	69%
250W MH	290	65	78%
250W HPS	295	65	78%

Specifications

Weight: 7.3 lbs (3.3kg)

Construction: Die Cast aluminum housing with powder coat paint. The standard colors are bronze or white.

LED System: LED system with a life rating of >150,000 hours at L_{70} @ 25°C. Luminaire efficacy up to 135 LPW.

Electrical: Offered in 25, 35, 45, and 65 watts, the luminaire is designed to operate through the 120-277 VAC universal voltage range. The LED driver is a constant current device. The power factor is ≥90% and THD is ≤20%.

Dimming: The driver is 0-10V dimmable (down to 10%). Please reference the dimmer compatibility document (LEDLUM012).

Color Characteristics: CRI >80; CCT of 4000K or 5000K.

Optics: Type V distribution with UV resistant polycarbonate lens.

Installation: Luminaire can be surface or pendant mounted (accessories not included).

Operating Temperature: -40°F to +122°F (-40°C to +50°C).

Listings: cULus listed to UL1598 rated for wet locations and IP66 rated. DLC Premium listed for fuel pump canopy applications.

Warranty: Standard 5-year luminaire warranty (LEDLUM001).

Note: Specifications subject to change without notice. IES files available online.

Ordering Guide

Item Number:

CANOPY	2A	/	XXX	UNV	D	8	XX	/	12	XX	5	/	XX
Product Name CANOPY	Generation 2A		Wattage 025 = 25 Watts 035 = 35 Watts 045 = 45 Watts 065 = 65 Watts	Voltage UNV = 120-277V	Dimming D = 0-10V	CRI 8 ≥80	Color Temp (CCT) 40 = 4000K 50 = 5000K		Size 12 = 12"	Shape R = Round S = Square	Distribution 5 = Type V		Color/Finish BZ = Bronze WH = White

Photometric Data

25W CANOPY2A25UNVD840
Isofootcandle Lines at
10' Mounting Height

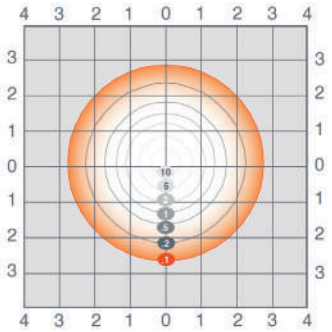

35W CANOPY2A35UNVD840
Isofootcandle Lines at
10' Mounting Height

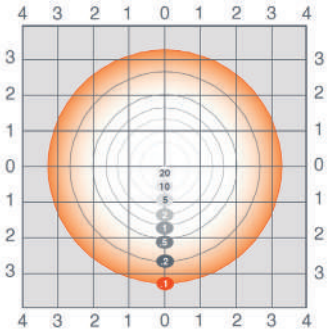

45W CANOPY2A45UNVD840
Isofootcandle Lines at
10' Mounting Height

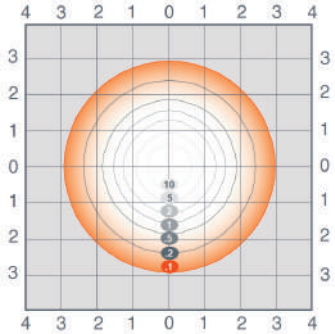

65W CANOPY2A65UNVD840
Isofootcandle Lines at
10' Mounting Height

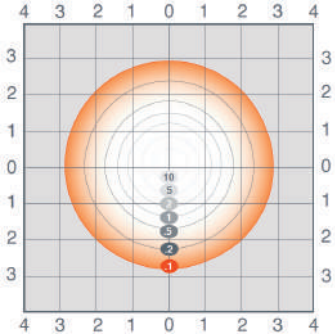

For 25, 35 and 45W models at other mounting heights apply the following multipliers:

Mounting Height	6'	8'	10'	12'	15'
Multiplier	2.25	1.56	1.00	0.69	0.56

For 65W models at other mounting heights apply the following multipliers:

Mounting Height	6'	8'	10'	12'	15'
Multiplier	2.25	1.56	1.00	0.69	0.56

Ordering Information

Round Canopy

Item Number	Ordering Abbreviation	Color	Power (W)	Input Voltage	Dimming	CRI	Color Temp (CCT)	Lumens	LPW	DLC
60398	CANOPY2A/025UNVD840/12R5/WH	White	25	120-277	0-10V	>70	4000K	3400	135	Prm
60399	CANOPY2A/025UNVD850/12R5/WH	White	25	120-277	0-10V	>70	5000K	3400	135	Prm
60400	CANOPY2A/035UNVD840/12R5/WH	White	35	120-277	0-10V	>70	4000K	4725	135	Prm
60401	CANOPY2A/035UNVD850/12R5/WH	White	35	120-277	0-10V	>70	5000K	4725	135	Prm
60402	CANOPY2A/045UNVD840/12R5/WH	White	45	120-277	0-10V	>70	4000K	6075	135	Prm
60403	CANOPY2A/045UNVD850/12R5/WH	White	45	120-277	0-10V	>70	5000K	6075	135	Prm
60404	CANOPY2A/065UNVD840/12R5/WH	White	65	120-277	0-10V	>70	4000K	8750	135	Prm
60405	CANOPY2A/065UNVD850/12R5/WH	White	65	120-277	0-10V	>70	5000K	8750	135	Prm
60406	CANOPY2A/025UNVD840/12R5/BZ	Bronze	25	120-277	0-10V	>70	4000K	3400	135	Prm
60407	CANOPY2A/025UNVD850/12R5/BZ	Bronze	25	120-277	0-10V	>70	5000K	3400	135	Prm
60408	CANOPY2A/035UNVD840/12R5/BZ	Bronze	35	120-277	0-10V	>70	4000K	4725	135	Prm
60409	CANOPY2A/035UNVD850/12R5/BZ	Bronze	35	120-277	0-10V	>70	5000K	4725	135	Prm
60410	CANOPY2A/045UNVD840/12R5/BZ	Bronze	45	120-277	0-10V	>70	4000K	6075	135	Prm
60411	CANOPY2A/045UNVD850/12R5/BZ	Bronze	45	120-277	0-10V	>70	5000K	6075	135	Prm
60412	CANOPY2A/065UNVD840/12R5/BZ	Bronze	65	120-277	0-10V	>70	4000K	8750	135	Prm
60413	CANOPY2A/065UNVD850/12R5/BZ	Bronze	65	120-277	0-10V	>70	5000K	8750	135	Prm

Square Canopy

Item Number	Ordering Abbreviation	Color	Power (W)	Input Voltage	Dimming	CRI	Color Temp (CCT)	Lumens	LPW	DLC
60414	CANOPY2A/025UNVD840/12S5/WH	White	25	120-277	0-10V	>70	4000K	3400	135	Prm
60415	CANOPY2A/025UNVD850/12S5/WH	White	25	120-277	0-10V	>70	5000K	3400	135	Prm
60416	CANOPY2A/035UNVD840/12S5/WH	White	35	120-277	0-10V	>70	4000K	4725	135	Prm
60417	CANOPY2A/035UNVD850/12S5/WH	White	35	120-277	0-10V	>70	5000K	4725	135	Prm
60418	CANOPY2A/045UNVD840/12S5/WH	White	45	120-277	0-10V	>70	4000K	6075	135	Prm
60419	CANOPY2A/045UNVD850/12S5/WH	White	45	120-277	0-10V	>70	5000K	6075	135	Prm
60420	CANOPY2A/065UNVD840/12S5/WH	White	65	120-277	0-10V	>70	4000K	8750	135	Prm
60421	CANOPY2A/065UNVD850/12S5/WH	White	65	120-277	0-10V	>70	5000K	8750	135	Prm
60422	CANOPY2A/025UNVD840/12S5/BZ	Bronze	25	120-277	0-10V	>70	4000K	3400	135	Prm
60423	CANOPY2A/025UNVD850/12S5/BZ	Bronze	25	120-277	0-10V	>70	5000K	3400	135	Prm
60424	CANOPY2A/035UNVD840/12S5/BZ	Bronze	35	120-277	0-10V	>70	4000K	4725	135	Prm
60425	CANOPY2A/035UNVD850/12S5/BZ	Bronze	35	120-277	0-10V	>70	5000K	4725	135	Prm
60426	CANOPY2A/045UNVD840/12S5/BZ	Bronze	45	120-277	0-10V	>70	4000K	6075	135	Prm
60427	CANOPY2A/045UNVD850/12S5/BZ	Bronze	45	120-277	0-10V	>70	5000K	6075	135	Prm
60428	CANOPY2A/065UNVD840/12S5/BZ	Bronze	65	120-277	0-10V	>70	4000K	8750	135	Prm
60429	CANOPY2A/065UNVD850/12S5/BZ	Bronze	65	120-277	0-10V	>70	5000K	8750	135	Prm

Mounting Accessories

Item Number	Ordering Abbreviation	Item Description
60683	CANOPY3A/MTGPLATE/12/BZ	12.5" Mounting Plate, Bronze
60684	CANOPY3A/MTGPLATE/16/BZ	16" Mounting Plate, Bronze
60685	CANOPY3A/MTGPLATE/12/WH	12.5" Mounting Plate, White
60686	CANOPY3A/MTGPLATE/16/WH	16" Mounting Plate, White

12.5 Inch

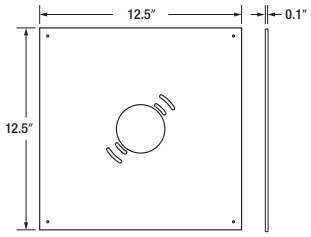

16 Inch

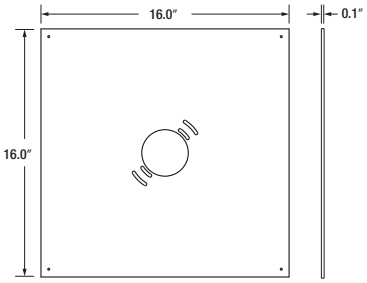

LEDVANCE LLC
200 Ballardvale Street
Wilmington, MA 01887 USA
Phone 1-800-LIGHTBULB (1-800-544-4828)
www.sylvania.com

SYLVANIA and LEDVANCE are registered trademarks.
All other trademarks are those of their respective owners.
Licensee of product trademark SYLVANIA in general lighting.
Specifications subject to change without notice.

/sylvania /sylvania

© 2019 LEDVANCE LLC

SYLVANIA Luminaires

Garage

Catalog #	Type
Project	
Notes	
Date	
Prepared by	

Dimensions

Front View

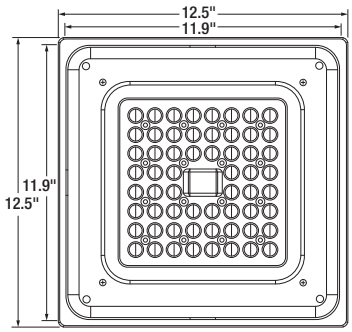

Side View

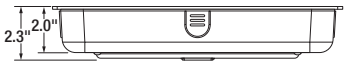

Product Features

The Garage luminaires are environmentally preferable LED alternatives to traditional HID luminaires, offering up to 78% in energy savings. Ideal in place of traditional luminaires, or as new installations, the Garage series is offered in two wattages/lumen packages for use in Garages, Canopies, and Mid bay general lighting.

The optics of these luminaires is beneficial for spacing them strategically to save on installation and energy costs. SYLVANIA luminaires assure optimum light engine performance for extended service and rated life (≥125,000 hours L_{70}).

Wattage Comparison Chart

Slim Wall Pack

Traditional Source	Traditional System Wattage	LED System Wattage	Energy Savings
70W HPS	91	35	54%
100W HPS	120	35	65%
100W MH	130	35	68%
150W HPS	170	35	75%
150W MH	188	35	78%
150W HPS	170	55	66%
150W MH	188	55	69%
175W MH	210	55	72%

Specifications

Weight: 5.3lbs (2.4kg)

Construction: One-piece cast, aluminum alloy front plate with powder coat paint finish, UV stabilized polycarbonate back plate and PMMA lens. The standard color is silver.

LED System: LED system with a life rating of ≥125,000 hours at L_{70} @25°C. Luminaire efficacy up to 123 LPW.

Electrical: Offered in 35 and 55 Watts, the luminaire is designed to operate through the 120-277 VAC voltage. The LED driver has a 4kV surge suppression and is a constant current device, meeting UL1310 and UL48 Class 1 with built-in over temperature protection. The power factor is ≥90% and THD is ≤20%.

Dimming: The driver is 0-10V dimmable (down to 12%). Please reference the dimmer compatibility document (LEDLUM012).

Color Characteristics: CRI>70; CCT of 4000K or 5000K

Optics: Type V garage distribution with PMMA lens. Optional glare shield available.

Options Available: Microwave Sensor

Installation: Luminaire mounts to recessed outlet box or can be pendant mounted (accessories not included). External controls can be added through existing knockouts.

Operating Temperature: -40°F to +104°F (-40°C to +40°C).

Listings: cETLus listed to UL1598 standards and for wet locations and IP66 rated.

Warranty: Standard 5-year luminaire warranty (LEDLUM001).

Note: Specifications subject to change without notice. IES files available online.

Ordering Guide

Item Number:

GARAG	1A	/	XXX	UNV	D	7	XX	/	G5	/	SV	/	X
Product Name GARAG	Generation 1A		Wattage 035 = 35 Watts 055 = 55 Watts	Voltage UNV = 120-277V	Dimming D = 0-10V	CRI 7≥70	Color Temp (CCT) 40 = 4000K 50 = 5000K		Optics G5 = Garage		Color/Finish SV = Silver		Option Blank = No Option D = Motion/Daylight Sensor

Photometric Data

GARAG1A/035UNVD740/G5
Isofootcandle Lines at 12' Mounting Height

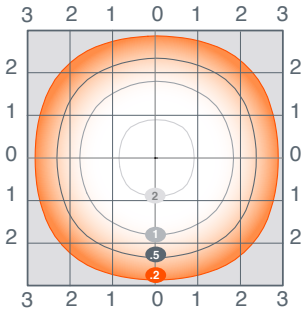

GARAG1A/055UNVD740/G5
Isofootcandle Lines at 12' Mounting Height

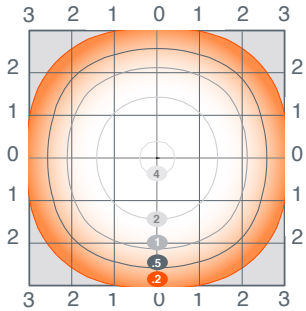

For other mounting heights apply the following multipliers:

Mounting Height	8'	10'	12'	15'	18'
Multiplier	2.25	1.44	1.00	0.64	0.44

Ordering Information

Item Number	Ordering Abbreviation	Power (W)	Input Voltage	CRI	Color Temp (CCT)	Distribution	Total Fixture Lumens	LPW*	DLC**	Options
74502	GARAG1A/035UNVD750/G5/SV	35	120-277V	>70	5000K	Garage Type V	4200	119	Prm	
74503	GARAG1A/055UNVD740/G5/SV	55	120-277V	>70	4000K	Garage Type V	6200	119	Prm	
74504	GARAG1A/055UNVD750/G5/SV	55	120-277V	>70	5000K	Garage Type V	6200	118	Prm	
74506	GARAG1A/035UNVD750/G5/SV/D	35	120-277V	>70	5000K	Garage Type V	4200	119	Prm	Sensor
74507	GARAG1A/055UNVD740/G5/SV/D	55	120-277V	>70	4000K	Garage Type V	6200	119	Prm	Sensor
74508	GARAG1A/055UNVD750/G5/SV/D	55	120-277V	>70	5000K	Garage Type V	6200	118	Prm	Sensor

*LPW per LM79 report
**Prm for DLC Premium
For further information and to learn more about utility rebates, contact your local SYLVANIA sales representative.

Options Information

Sensor: Motion and Daylight sensors are both available.

Motion Sensor (Default Setting):

Motion	100% lumen output
≥5min with no motion	10% lumen output
≥60min with no motion	10% lumen output – never turns off

Daylight (Default Setting) 5fc/24H

For customized settings: Purchase remote control separately and refer to the Sensor Remote document LEDLUM027 for further instructions.

Accessory Information

Item Number	Ordering Abbreviation	Item Description
74745	GARAG1A/MTGPLATE/16/SV	16 inch Mounting Plate, Silver Finish
74921	GARAG1A/SHIELD	Polycarbonate Glare Shield
74550	GARAG1A/CONN/1/SV	Wire through connector (Set of 1)
74551	GARAG1A/CONN/2/SV	Wire through connector (Set of 2)
71758	SENSOR1A/REMOTE/D	Sensor Remote

Garage with Glare Shield and Connectors

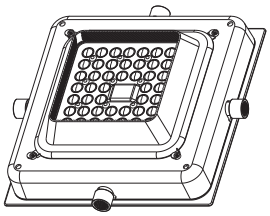

Wire Through Connector

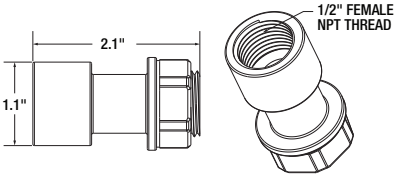

16 inch Mounting Plate

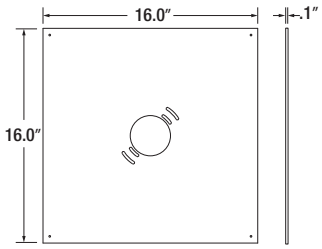

LEDVANCE LLC
200 Ballardvale Street
Wilmington, MA 01887 USA
Phone 1-800-LIGHTBULB (1-800-544-4828)
www.sylvania.com

SYLVANIA and LEDVANCE are registered trademarks.
All other trademarks are those of their respective owners.
Licensee of product trademark SYLVANIA in general lighting.
Specifications subject to change without notice.

/sylvania /sylvania

© 2019 LEDVANCE LLC

SYLVANIA Luminaires

ValueLED™ Garage Luminaire

Item #	
Type	
Project	
Notes	
Date	

Application

The Garage luminaires are environmentally preferable LED alternatives to traditional HID luminaires, offering up to 81% in energy savings. Ideal in place of traditional luminaires, or as new installations, the ValueLED Garage series is offered in three wattages/lumen packages for use in garages, canopies, and mid bay general lighting.

Benefits and Features

- CCT Selectable (3000K, 4000K, or 5000K) enabled through switch located inside fixture
- IP65 rated body with polycarbonate lens offers easy mounting, reducing installation and maintenance costs
- High color rendering and DLC Premium listing ensure energy efficiency and provide uniform and even lighting
- Up to 115 LPW
- CRI >80
- Offered in 25, 40, and 55 watts
- Type V distribution
- Energy savings up to 88%

Electrical

- 120-277VAC
- Power Factor >90%
- THD <20%
- 0-10V dimmable

Rated Life

- 100,000 hours (L_{70}) @25°C

Warranty

- 5-year

Ambient Operating Range

- -22°F to +113°F (-30°C to +45°C)

Certifications and Listings

- cULus
- RoHS
- FCC
- DLC Premium

Wattage Comparison

Traditional Source	Traditional System Wattage	LED System Wattage	Energy Savings
35W HPS	42	25	40%
50W HPS	62	25	60%
70W HPS	91	25	73%
70W HPS	91	40	56%
100W HPS	120	25	79%
100W MH	130	25	81%
100W HPS	120	40	67%
100W MH	130	40	69%
150W HPS	170	25	85%
150W MH	188	25	87%
150W HPS	170	40	76%
150W MH	188	40	79%
150W HPS	170	55	68%
150W MH	188	55	71%
175W MH	210	25	88%
175W MH	210	40	81%
175W MH	210	55	74%
250W MH	290	40	86%
250W MH	290	55	81%

Installation

- Easy installation directly to 3/4" pipe or back plate to junction box

Ordering Guide

GARAG	2A	/	XXX	UNV	D	8	SC2	/	10R	5	WH	/	X
Product Name GARAG = Garage Luminaire	Generation 2A = Generation 2A		Wattage 025 = 25 Watts 040 = 40 Watts 055 = 55 Watts	Voltage 120-277V	Dimming D = 0-10V Dimming	CRI 8 = >80	Color Temp SC2 = 3000, 4000 or 5000K		Dimensions 10R = 10" diameter, round	Distribution 5 = Type V Distribution	Color / Finish WH = White		Options Blank = no options D = Daylight / Motion Sensor

Ordering Information

Item Number	Ordering Abbreviation	Wattage (W)	Input Voltage (V)	Dimming	CRI	Color Temperature (CCT)	Distribution	Total Fixture Lumens	LPW	DLC	Options
61744	GARAG2A/025UNVD8SC2/10R5/WH	25	120-277	0-10V	>80	3000, 4000 or 5000K	Type V	2800	112	Prm	–
61745	GARAG2A/040UNVD8SC2/10R5/WH	40	120-277	0-10V	>80	3000, 4000 or 5000K	Type V	4500	113	Prm	–
61746	GARAG2A/055UNVD8SC2/10R5/WH	55	120-277	0-10V	>80	3000, 4000 or 5000K	Type V	6300	115	Prm	–
61747	GARAG2A/025UNVD8SC2/10R5/WH/D	25	120-277	0-10V	>80	3000, 4000 or 5000K	Type V	2800	112	Prm	Daylight/Motion Sensor
61748	GARAG2A/040UNVD8SC2/10R5/WH/D	40	120-277	0-10V	>80	3000, 4000 or 5000K	Type V	4500	113	Prm	Daylight/Motion Sensor
61749	GARAG2A/055UNVD8SC2/10R5/WH/D	55	120-277	0-10V	>80	3000, 4000 or 5000K	Type V	6300	115	Prm	Daylight/Motion Sensor

Photometric Data

GARAG2A/025UNVD8SC2/10R5
Isofootcandle Lines at 12' Mounting Height

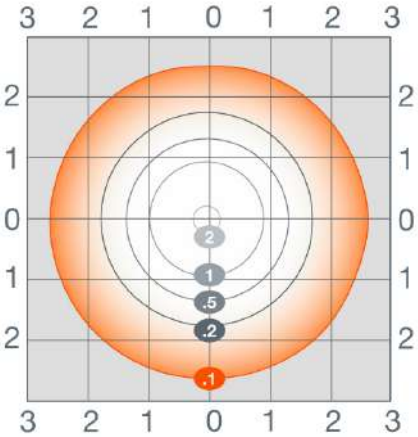

GARAG2A/040UNVD8SC2/10R5
Isofootcandle Lines at 12' Mounting Height

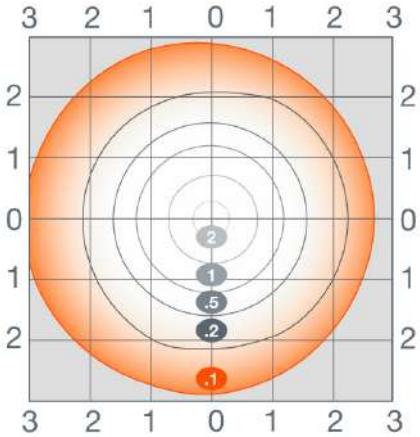

GARAG2A/055UNVD8SC2/10R5
Isofootcandle Lines at 12' Mounting Height

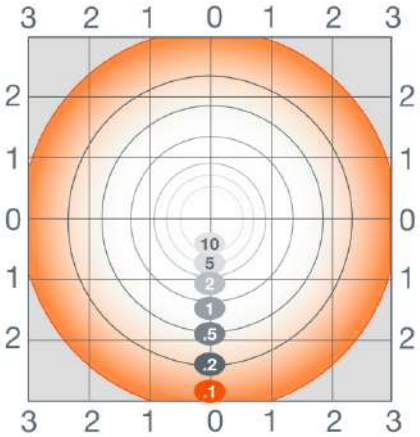

For other mounting heights apply the following multipliers:

Mounting Height	8'	10'	12'	15'	18'
Multiplier	2.25	1.44	1.00	0.64	0.44

Physical Information

Luminaire Description	Diameter	Height
Garage Luminaire	10" (254mm)	3.1" (78.5mm)

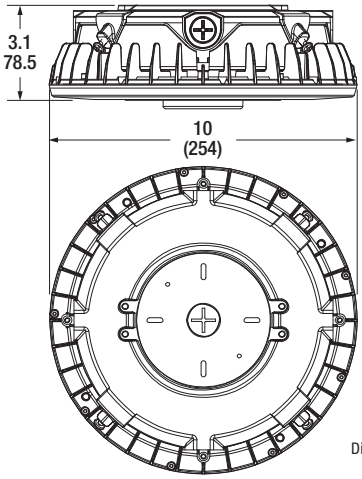

Dimensions in inches (mm)

LEDVANCE LLC
200 Ballardvale Street
Wilmington, MA 01887 USA
Phone 1-800-LIGHTBULB (1-800-544-4828)
www.sylvania.com

SYLVANIA and LEDVANCE are registered trademarks.
All other trademarks are those of their respective owners.
Licensee of product trademark SYLVANIA in general lighting.
Specifications subject to change without notice.

/sylvania /sylvania

Name:
Email:
Phone:

© 2020 LEDVANCE LLC

SYLVANIA Luminaires

Vapor Tight

Catalog #	Type
Project	
Notes	
Date	
Prepared by	

Dimensions

	L	W	H
2 ft 25W	24.9" (632mm)	4.0" (102mm)	3.3" (85mm)
4 ft 20W	48.5" (1232mm)	3.4" (85mm)	3.3" (85mm)
4 ft 40/50W	48.1" (1232mm)	4.0" (102mm)	3.3" (85mm)
4 ft IP67	49.1" (1247mm)	4.8" (120mm)	3.3" (85mm)
8 ft 65W	96" (2438mm)	4.0" (102mm)	3.3" (85mm)

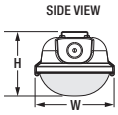

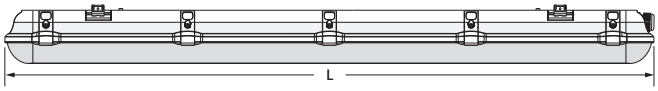

Product Features

- Corrosion resistant housing with captive stainless steel mounting accessories and included waterproof compression fitting
- IP65 or IP67 rated, ETL sanitation listed for NSF splash zones, and a wide operating temperature of -40°C to 50°C
- Optional integrated microwave (daylight/motion) sensor for additional energy savings

Wattage Comparison Chart

Vapor Tight

Traditional Source	Traditional System Wattage	LED System Wattage	Energy Savings
2 F17 T8	33	20/25	39%/24%
1 F32 T8	27	20/25	26%/7%
35W HPS	45	20/25	56%/44%
50W HPS	62	20/25	68%/60%
70W HPS	92	25	73%
2 F28 T8	50	40/50	20%/0%
2 F32 T8	54	40/50	26%/7%
1 F96 T12	86	40/50	53%/42%
70 W HPS	91	40/50	56%/45%
4 F32 T8	108	65	39%
S F96 T12	172	65	62%
150W HPS	170	65	61%
150W MH	188	65	65%
175W MH	210	65	69%
250W HPS	295	65	78%
250W MH	290	65	77%

Specifications

Weight: 2 ft: 2.5 lbs (1.2 kg) 4 ft: 5.8 lbs (2.6 kg) 8 ft: 12.5 lbs (5.7 kg)

Construction: One-piece polycarbonate housing with one-piece polycarbonate lens and stainless steel clips. The standard color is gray.

LED System: LED system with a life rating of ≥84,000 hours (HUV) L_{70} @25°C. Luminaire efficacy up to 140 LPW.

Electrical: Offered in 20, 25, 40, 50 and 65 Watts, the luminaire is designed to operate through the 120V-277VAC universal voltage and 347-480VAC high universal voltage range. The LED driver has a 2.5kV inherent surge suppression and is a constant current device, meeting UL1310 and UL48 Class 2 with built-in over temperature protection. The power factor is ≥90% and THD is ≤20%.

Dimming: The driver is 0-10V dimmable (down to 6%). Please reference the dimmer compatibility document (LEDLUM012).

Color Characteristics: CRI>80; CCT of 4000K or 5000K.

Optics: Type V distribution with a clear etched polycarbonate lens or optional diffuse lens (sold separately).

Installation: Luminaire mounts to recessed outlet box or can be surface or chain mounted (chain not included). Connector available for tandem wiring. External controls can be added through existing knockouts.

Operating Temperature: -40°F to +122°F (-40°C to +50°C);
EM: +14°F to +122°F (-10°C to +50°C).

Listings: cULus listed to UL1598 standards for wet locations, IP65 or IP67 rated, and ETL Sanitation listed for NSF splash zones. IP67 units are NEMA 4X rated.

Warranty: Standard 5-year luminaire warranty (LEDLUM001).

Note: Specifications subject to change without notice. IES files available online.

c UL us LISTED · RoHS compliant · FC · DLC LISTED · DLC PREMIUM · ETL Intertek

*Please see page 3 for DLC listings.

Ordering Guide

Item Number:

VAPOR	XX	/	XXX	XXX	D	8	XX	/	XX	XX	/	GR	/	XX
Product Name	Generation		Wattage	Voltage	Dimming	CRI	Color Temp (CCT)		Size	Optics		Color/Finish		Options
VAPOR	1A		020 = 20 Watts	UNV = 120-277V	D = 0-10V	8≥80	40 = 4000K		24 = 24" long	EC = Etched Lens		GR = Gray		Blank = No Option
	1B		025 = 25 Watts	HUV = 347-480V*			50 = 5000K		48 = 48" long	Type V Distribution				D = Motion/Daylighting Sensor
	2B		040 = 40 Watts						96 = 96" long	D5 = Diffused Lens Type V Distribution				E = Emergency
			050 = 50 Watts											
			065 = 65 Watts											

*HUV version available in 50 and 65 watts only

Photometric Data

2 ft VAPOR1A/025UNVD840
Isofootcandle Lines at 15' Mounting Height

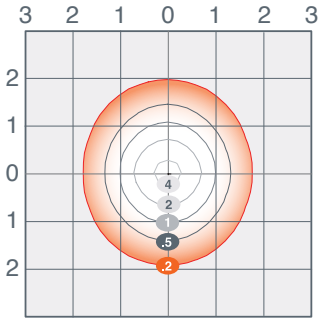

4 ft VAPOR1B/040UNVD840
Isofootcandle Lines at 12' Mounting Height

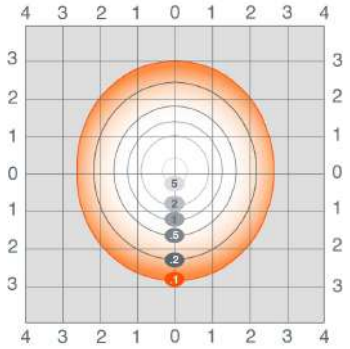

8 ft VAPOR1B/040UNVD840
Isofootcandle Lines at 12' Mounting Height

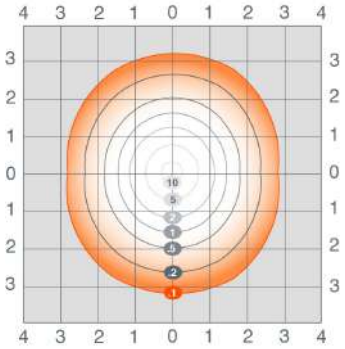

For other mounting heights apply the following multipliers:

Mounting Height	10'	12'	15'	18'	20'
Multiplier	2.25	1.56	1.00	0.44	0.36

For other mounting heights apply the following multipliers:

Mounting Height	8'	10'	12'	15'	16'	18'
Multiplier	2.25	1.44	1.00	0.73	0.56	0.44

*For 20W use 0.5 multiplier

Fixture Spacing Chart

	VAPOR1A/025UNVD840/24EC/GR			VAPOR1B/040UNVD840/48EC/GR		
	On Center Fixture Spacing			On Center Fixture Spacing		
	8'x10'	10'x10'	10'x12'	8'x10'	10'x10'	10'x12'
8'	39	29	23.2	65.6	51.2	40.2
10'	37.9	28.1	22.5	63.6	49.9	39.2
12'	35.2	27.3	21.9	63.4	48.3	38.1
14'	34.2	26.6	21.3	61.7	47.3	37.2
16'	33.2	25.6	20.7	55.5	46.3	36.2
18'	32.3	24.9	20.1	53.9	44.7	35.3

Average Illuminance (fc) at 0" AFF.
80/50/20 reflectances.

Options Information

Sensor: Motion and Daylight sensors are both available.

Motion Sensor (Default Setting):

Motion	100% lumen output
≥5min with no motion	30% lumen output
≥60min with no motion	Off

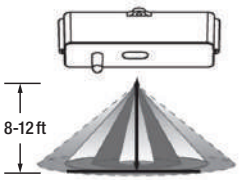

Height of Installation: 8-12 ft

Detection Range
Height of installation: 8ft

Daylight (Default Setting): 5fc/24H

For customized settings: Purchase remote control separately and refer to the Vapor Tight Remote document LEDLUM015 for further instructions.

Emergency Battery Backup:
Activates when normal power supply to the fixture fails, providing a minimum of 500 lumens for at least 90 minutes.

Ordering Information (Clear Lens)

Item Number	Ordering Abbreviation	Ingress Protection	Power (W)	Input Voltage	Color Temp (CCT)	Total Fixture Lumens Clear Lens	Total Fixture Lumens Diffuse Lens	LPW* Clear Lens	LPW* Diffuse Lens	DLC** Clear Lens	DLC** Diffuse Lens	Options
2ft Vapor Tight												
74530	VAPOR1A/025UNVD840/24EC/GR	IP65	25	120-277	4000K	3100	2800	135	121	Prm	Std	–
74531	VAPOR1A/025UNVD850/24EC/GR	IP65	25	120-277	5000K	3100	2800	137	123	Prm	Std	–
74532	VAPOR1B/025UNVD840/24EC/GR/D	IP65	25	120-277	4000K	3100	2800	135	121	Prm	–	Sensor
74533	VAPOR1B/025UNVD850/24EC/GR/D	IP65	25	120-277	5000K	3100	2800	137	123	Prm	–	Sensor
60074	VAPOR1B/025UNVD840/24EC/GR/E	IP65	25	120-277	4000K	3100	2800	135	121	Prm	–	Emergency
60075	VAPOR1B/025UNVD850/24EC/GR/E	IP65	25	120-277	5000K	3100	2800	137	123	Prm	–	Emergency
4ft Vapor Tight												
74534	VAPOR1B/020UNVD840/48EC/GR	IP65	20	120-277	4000K	2600	2300	127	114	Prm	–	–
74535	VAPOR1B/020UNVD850/48EC/GR	IP65	20	120-277	5000K	2600	2300	128	115	Prm	–	–
74536	VAPOR1B/020UNVD840/48EC/GR/D	IP65	20	120-277	4000K	2600	2300	127	114	Prm	–	Sensor
74537	VAPOR1B/020UNVD850/48EC/GR/D	IP65	20	120-277	5000K	2600	2300	128	115	Std	–	Sensor
60043	VAPOR1B/020UNVD840/48EC/GR/E	IP65	20	120-277	4000K	2500	2300	130	114	Prm	–	Emergency
60044	VAPOR1B/020UNVD850/48EC/GR/E	IP65	20	120-277	5000K	2500	2300	130	115	Prm	–	Emergency
60045	VAPOR1B/020UNVD840/48EC/GR/DE	IP65	20	120-277	4000K	2500	2300	130	114	Prm	–	Sensor, Emergency
60046	VAPOR1B/020UNVD850/48EC/GR/DE	IP65	20	120-277	5000K	2500	2300	130	115	Prm	–	Sensor, Emergency
74376	VAPOR1B/040UNVD840/48EC/GR	IP65	40	120-277	4000K	5300	4600	139	120	Prm	Std	–
74377	VAPOR1B/040UNVD850/48EC/GR	IP65	40	120-277	5000K	5300	4700	137	122	Prm	Std	–
74378	VAPOR1B/040UNVD840/48EC/GR/D	IP65	40	120-277	4000K	5400	4500	140	116	Prm	Std	Sensor
74379	VAPOR1B/040UNVD850/48EC/GR/D	IP65	40	120-277	5000K	5400	4600	137	119	Prm	Std	Sensor
74554	VAPOR1B/040UNVD840/48EC/GR/E	IP65	40	120-277	4000K	5300	4600	139	120	Prm	Std	Emergency
74555	VAPOR1B/040UNVD850/48EC/GR/E	IP65	40	120-277	5000K	5300	4700	137	122	Prm	Std	Emergency
74556	VAPOR1B/040UNVD840/48EC/GR/DE	IP65	40	120-277	4000K	5400	4500	140	116	Prm	Std	Sensor, Emergency
74557	VAPOR1B/040UNVD850/48EC/GR/DE	IP65	40	120-277	5000K	5400	4600	137	119	Prm	Std	Sensor, Emergency
74552	VAPOR1A/050HUVD840/48EC/GR	IP65	50	347-480	4000K	5700	–	111	–	Std	–	–
74553	VAPOR1A/050HUVD850/48EC/GR	IP65	50	347-480	5000K	5700	–	111	–	Std	–	–
60376	VAPOR1B/050HUVD840/48EC/GR/D	IP65	50	347-480	4000K	5700	–	111	–	Std	–	Sensor
60377	VAPOR1B/050HUVD850/48EC/GR/D	IP65	50	347-480	5000K	5700	–	111	–	Std	–	Sensor
60047	VAPOR2B/040UNVD840/48EC/GR	IP67	40	120-277	4000K	5300	4600	139	120	Prm	–	–
60048	VAPOR2B/040UNVD850/48EC/GR	IP67	40	120-277	5000K	5300	4700	137	122	Prm	–	–
60049	VAPOR2B/040UNVD840/48EC/GR/D	IP67	40	120-277	4000K	5300	4600	139	120	Prm	–	Sensor
60050	VAPOR2B/040UNVD850/48EC/GR/D	IP67	40	120-277	5000K	5300	4700	137	122	Prm	–	Sensor
8ft Vapor Tight												
60355	VAPOR1B/065UNVD840/96EC/GR	IP65	65	120-277	4000K	8750	–	135	–	Prm	–	–
60356	VAPOR1B/065UNVD850/96EC/GR	IP65	65	120-277	5000K	8750	–	135	–	Prm	–	–
60357	VAPOR1B/065UNVD840/96EC/GR/D	IP65	65	120-277	4000K	8750	–	135	–	Prm	–	Sensor
60358	VAPOR1B/065UNVD850/96EC/GR/D	IP65	65	120-277	5000K	8750	–	135	–	Prm	–	Sensor
60359	VAPOR1B/065UNVD840/96EC/GR/E	IP65	65	120-277	4000K	8750	–	135	–	Prm	–	Emergency
60360	VAPOR1B/065UNVD850/96EC/GR/E	IP65	65	120-277	5000K	8750	–	135	–	Prm	–	Emergency
60361	VAPOR1B/065UNVD840/96EC/GR/DE	IP65	65	120-277	4000K	8750	–	135	–	Prm	–	Sensor, Emergency
60362	VAPOR1B/065UNVD850/96EC/GR/DE	IP65	65	120-277	5000K	8750	–	135	–	Prm	–	Sensor, Emergency
60363	VAPOR1B/065HUVD840/96EC/GR	IP65	65	347-480	4000K	8750	–	135	–	Prm	–	–
60364	VAPOR1B/065HUVD850/96EC/GR	IP65	65	347-480	5000K	8750	–	135	–	Prm	–	–
60365	VAPOR1B/065HUVD840/96EC/GR/D	IP65	65	347-480	4000K	8750	–	135	–	Prm	–	Sensor
60366	VAPOR1B/065HUVD850/96EC/GR/D	IP65	65	347-480	5000K	8750	–	135	–	Prm	–	Sensor

*LPW per LM79 Report
**Std for DLC Standard, Prm for DLC Premium

Ordering Information (Diffuse Lens)

Item Number	Ordering Abbreviation	Ingress Protection	Power (W)	Input Voltage	Color Temp (CCT)	Total Fixture Lumens Clear Lens	Total Fixture Lumens Diffuse Lens	LPW* Clear Lens	LPW* Diffuse Lens	DLC** Clear Lens	DLC** Diffuse Lens	Options
4ft Vapor Tight												
60242	VAPOR1B/040UNVD840/48D5/GR	IP65	40	120-277	4000K	5300	4600	139	120	Prm	Std	–
60243	VAPOR1B/040UNVD850/48D5/GR	IP65	40	120-277	5000K	5300	4700	137	122	Prm	Std	–
60244	VAPOR1B/040UNVD840/48D5/GR/D	IP65	40	120-277	4000K	5400	4500	140	116	Prm	Std	Sensor
60245	VAPOR1B/040UNVD850/48D5/GR/D	IP65	40	120-277	5000K	5400	4600	137	119	Prm	Std	Sensor
60246	VAPOR1B/040UNVD840/48D5/GR/E	IP65	40	120-277	4000K	5300	4600	139	120	Prm	Std	Emergency
60247	VAPOR1B/040UNVD850/48D5/GR/E	IP65	40	120-277	5000K	5300	4700	137	122	Prm	Std	Emergency
60248	VAPOR1B/040UNVD840/48D5/GR/DE	IP65	40	120-277	4000K	5400	4500	140	116	Prm	Std	Sensor, Emergency
60249	VAPOR1B/040UNVD850/48D5/GR/DE	IP65	40	120-277	5000K	5400	4600	137	119	Prm	Std	Sensor, Emergency

*LPW per LM79 Report
**Std for DLC Standard, Prm for DLC Premium

Accessories and Replacement Parts*

Item Number	Ordering Abbreviation	Item Description
74541	VAPOR1B/REMOTE	Vapor Tight Sensor Remote compatible with VAPOR1B and VAPOR2B
61458	VAPOR2B/LENS/24D5	2ft IP67 Diffuse Lens compatible with VAPOR2B
61459	VAPOR1X/LENS/24EC	2ft IP65 Etched Lens replacement compatible with VAPOR1A and VAPOR1B
74744	VAPOR1X/LENS/24D5	2ft IP65 Diffuse Lens compatible with VAPOR1A and VAPOR1B
61462	VAPOR1X/SMLENS/48EC	4ft IP65 Etched Lens replacement compatible with VAPOR1B (20W only)
61463	VAPOR1X/SMLENS/48D5	4ft IP65 Diffuse Lens compatible with VAPOR1B (20W only)
61464	VAPOR2B/LENS/48EC	4ft IP67 Etched Lens replacement compatible with VAPOR2B
61457	VAPOR2B/LENS/48D5	4ft IP67 Diffuse Lens compatible with VAPOR2B
74538	VAPOR1X/LENS/48D5	4ft IP65 Diffuse Lens compatible with VAPOR1A and VAPOR1B
74448	VAPOR1A/LENS/48EC	4ft IP65 Etched Lens replacement compatible with VAPOR1A and VAPOR1B
61461	VAPOR1X/LENS/96D5	8ft IP65 Diffuse Lens compatible with VAPOR1B
61460	VAPOR1X/LENS/96EC	8ft IP65 Etched Lens replacement compatible with VAPOR1B
74920	VAPOR1A/CONN/BL	Tandem Wiring Connector

*Etched lens is the standard lens shipped with fixture.

DLC Listing

Item Number	Ordering Abbreviation	Linear Ambient Diffuse Lens	Clear Lens	Stairwell/ Passageway Clear Lens	Stairwell/ Passageway Diffuse Lens	Low-Bay Diffuse Lens	Low-Bay Clear Lens	Outdoor Canopy Clear Lens	Outdoor Canopy Diffuse Lens
2ft Vapor Tight									
74530	VAPOR1A/025UNVD840/24EC/GR	PQSP91E8	PSN1FP79					PLDGUGHA5AWM	
74531	VAPOR1A/025UNVD850/24EC/GR	P9UFMJP1	PPUEJ3FK					PLJLIB34EZ5O	
74532	VAPOR1B/025UNVD840/24EC/GR/D		PLBOXGMOBHHJ	PLZSC43CSRQF				PLVNDNZSG930	
74533	VAPOR1B/025UNVD850/24EC/GR/D		PL8DCUUOY1VL	PLWHK8GPPC0R					
60074	VAPOR1B/025UNVD840/24EC/GR/E		PLBOXGMOBHHJ						
60075	VAPOR1B/025UNVD850/24EC/GR/E		PL8DCUUOY1VL						
4ft Vapor Tight									
74534	VAPOR1B/020UNVD840/48EC/GR		PL5DXDVCKDJH					PLAWIZZKGIXW	
74535	VAPOR1B/020UNVD850/48EC/GR		PLYZ34VCFSSD					PLW55HD51UAZ	
74536	VAPOR1B/020UNVD840/48EC/GR/D		PL5DXDVCKDJH	PL5HDWS27PWW				PLAWIZZKGIXW	
74537	VAPOR1B/020UNVD850/48EC/GR/D		PLYZ34VCFSSD	PLZ8CGRK3SA9				PLW55HD51UAZ	
60043	VAPOR1B/020UNVD840/48EC/GR/E		PL5DXDVCKDJH					PLAWIZZKGIXW	
60044	VAPOR1B/020UNVD850/48EC/GR/E		PLYZ34VCFSSD					PLW55HD51UAZ	
60045	VAPOR1B/020UNVD840/48EC/GR/DE		PL5DXDVCKDJH	PL5HDWS27PWW				PLAWIZZKGIXW	
60046	VAPOR1B/020UNVD850/48EC/GR/DE		PLYZ34VCFSSD	PLZ8CGRK3SA9				PLW55HD51UAZ	
74376	VAPOR1B/040UNVD840/48EC/GR	PTNPGMPP	PVYCF6UR				PL265J2ZG4BX	PLUJOITUOZDA	PLQUX9HY0K09
74377	VAPOR1B/040UNVD850/48EC/GR	P39VVY2Z	PC3PTT8W				PLGMT90DHZ8X	PLRVP8AZWEQU	PLGD1M97VEV7
74378	VAPOR1B/040UNVD840/48EC/GR/D	PTNPGMPP	PVYCF6UR	PL400DXSACYY			PLQA58KMPQMB	PLUJOITUOZDA	PLQUX9HY0K09
74379	VAPOR1B/040UNVD850/48EC/GR/D	P39VVY2Z	PC3PTT8W	PLULT610E924			PLIBALW4B8DL	PLRVP8AZWEQU	PLGD1M97VEV7
74554	VAPOR1B/040UNVD840/48EC/GR/E	PTNPGMPP	PVYCF6UR				PLV9L811KFZM	PLUJOITUOZDA	PLQUX9HY0K09
74555	VAPOR1B/040UNVD850/48EC/GR/E	P39VVY2Z	PC3PTT8W				PLRJST3769ZE	PLB03WXVIGP0	PLGD1M97VEV7
74556	VAPOR1B/040UNVD840/48EC/GR/DE	PTNPGMPP	PVYCF6UR	PL400DXSACYY			PLFBW1Q0WD8P	PLUJOITUOZDA	PLQUX9HY0K09
74557	VAPOR1B/040UNVD850/48EC/GR/DE	P39VVY2Z	PC3PTT8W	PLULT610E924			PLT0KXPJYIOU	PLB03WXVIGP0	PLGD1M97VEV7
74552	VAPOR1A/050HUVD840/48EC/GR	PLAXUJHOOID5	PBA4FDDB				PL66NIXPNXPR	PLKHOK1NBLT1	
74553	VAPOR1A/050HUVD850/48EC/GR	P39VVY2Z	PQGF9FAQ				PLL90W53U54E	PL9Z939ZLR5S	
60376	VAPOR1B/050HUVD840/48EC/GR/D	PL769BDXR5NI	PLO8D3SGIWYB	PLOWI6CR773E	PL1OTV5DPLQ6		PLOCMVIFJ36O	PLZV3VG7B8GP	
60377	VAPOR1B/050HUVD850/48EC/GR/D	PL6ZZE5CNQYK	PLO8D3SGIWYB	PL3XA5JZCPWU	PLXFXS2MRKRY		PLPROZOK3ORT	PL7UEQ0RH2VK	
60047	VAPOR2B/040UNVD840/48EC/GR		PLM0UBQCY36H				PLGY7W2TNJYI	PLXB95KFUVQE	
60048	VAPOR2B/040UNVD850/48EC/GR		PLUL4LZWX42N				PLZDL7D8MYI8	PLRVP8AZWEQU	
60049	VAPOR2B/040UNVD840/48EC/GR/D		PLM0UBQCY36H	PL4PJB186SR2			PLYGHMU3R7OF	PLXB95KFUVQE	
60050	VAPOR2B/040UNVD850/48EC/GR/D		PLUL4LZWX42N	PLI1BBN5V4JD			PLUTO7OLBDID	PLRVP8AZWEQU	
8ft Vapor Tight									
60355	VAPOR1B/065UNVD840/96EC/GR		PLIIQO3MOQOU				PLTWGDYINC43	PLIMQKG9HAGW	
60356	VAPOR1B/065UNVD850/96EC/GR		PLKH42XGYH09				PLNE5XKMGINL	PLACBBDYXPWQ	
60357	VAPOR1B/065UNVD840/96EC/GR/D		PLIIQO3MOQOU				PLSFVSIHFP2Y	PLF48CNNX83Z	
60358	VAPOR1B/065UNVD850/96EC/GR/D		PLKH42XGYH09				PL5HZTXNZC3J	PLP1CI3MRN25	
60359	VAPOR1B/065UNVD840/96EC/GR/E		PLIIQO3MOQOU				PLI8NK7911JT	PLTVOKS3WXPG	
60360	VAPOR1B/065UNVD850/96EC/GR/E		PLKH42XGYH09				PLCLWI2XNS2E	PLLXZJKONCM0	
60361	VAPOR1B/065UNVD840/96EC/GR/DE		PLIIQO3MOQOU				PL3K67AA60L2	PLYNQRFYR7J7	
60362	VAPOR1B/065UNVD850/96EC/GR/DE		PLKH42XGYH09				PL9O9IRZ96ND	PLZI5FSXNHWA	
60363	VAPOR1B/065HUVD840/96EC/GR		PL166QIBJRA6			PL769BDXR5NI	PLN0PAEPUY8X	PLG4EC4T5LAB	
60364	VAPOR1B/065HUVD850/96EC/GR	PLRWNMEP2K6U	PLGL81IQF6HR			PL9GS6IJ9DKG	PLIDCV1P205T	PLKZMBA7C0TJ	
60365	VAPOR1B/065HUVD840/96EC/GR/D		PL57Q2PBPPJ9			PLX4ANUU85Q0	PL6QHRFY7RTO	PLRD01Q1LYKN	
60366	VAPOR1B/065HUVD850/96EC/GR/D	PLSH8WE685V2	PLOP5ZIULBO3			PLJ9OU17APJ3	PLEN10K5D18	PLPBWJ9S8K0E	

LEDVANCE LLC
200 Ballardvale Street
Wilmington, MA 01887 USA
Phone 1-800-LIGHTBULB (1-800-544-4828)
www.sylvania.com

SYLVANIA and LEDVANCE are registered trademarks.
All other trademarks are those of their respective owners.
Licensee of product trademark SYLVANIA in general lighting.
Specifications subject to change without notice.

/sylvania /sylvania

© 2020 LEDVANCE LLC

SYLVANIA Luminaires

Slim Wall Pack

Catalog #	Type
Project	
Notes	
Date	
Prepared by	

Dimensions

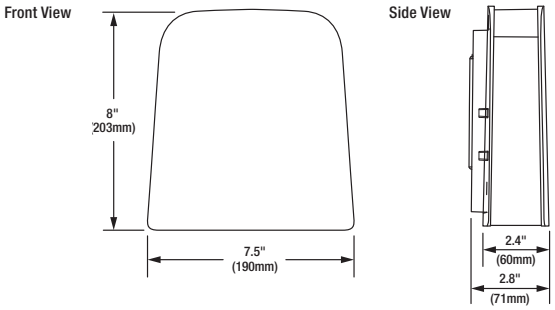

Product Features

The Wall Pack luminaires are environmentally preferable LED alternatives to traditional HID or Incandescent luminaires, offering up to 87% in energy savings. Ideal in place of traditional luminaires, or as new installations, the Wall Pack series is offered in four wattages/lumen packages for illuminating building exteriors, outdoor corridors, walkways, and stairwells.

The slim design of these luminaires is aesthetically pleasing and they are available with optional photo control. SYLVANIA luminaires assure optimum light engine performance for extended service and rated life (≥125,000 hours L_{70}).

Wattage Comparison Chart

Slim Wall Pack

Traditional Source	Traditional System Wattage	LED System Wattage	Energy Savings
23 W CFL	23	13	43%
100 W Inc	100	13	87%
150 W Inc	150	30	80%
50 W HPS	62	30	52%
70 W HPS	91	30	67%
70 W HPS	91	30	67%
70 W HPS	91	40	56%
100 W HPS	120	40	67%
100 W MH	130	40	69%
150 W HPS	170	60	65%
150 W MH	188	60	68%
175 W MH	210	60	71%

Specifications

Weight: UNV: 5.9 lbs (2.7 kg) 347V: 65 lbs (2.9 kg)

Construction: Two-piece cast aluminum alloy housing with powder coat paint finish and a glass lens. The standard color is bronze.

LED System: LED system with a life rating of ≥125,000 hours at L_{70} @25°C. Luminaire efficacy up to 121 LPW.

Electrical: Offered in 13, 30, 40, and 60 Watts, the luminaire is designed to operate through the 120-277 VAC universal voltage range (30 and 40 Watts in 347VAC). The LED driver has a 4kV inherent surge suppression and is a constant current device, meeting UL1310 and UL48 Class 2 with built-in over temperature protection. The fixture power factor is ≥90% and THD is ≤20%.

Color Characteristics: CRI>70; CCT of 4000K or 5000K.

Optics: Cutoff distribution with a flat tempered glass lens.

Options Available: Photocontrol (120V Only).

Installation: Luminaire mounts to exterior wall (knuckle and trunnion mount accessories available). Level included in back plate and luminaire can be mounted in any orientation.

Operating Temperature: -40°F to +104°F (-40°C to +40°C).

Listings: cULus listed to UL1598 standards for wet locations.

Warranty: Standard 5-year luminaire warranty (LEDLUM001).

Note: Specifications subject to change without notice. IES files available online.

c UL us LISTED

RoHS compliant

*See page 2 for DLC listings.

Ordering Guide

Item Number:

SLMWPK	XX	/	XXX	XXX	7	XX	/	CO	/	BZ	/	X
Product Name SLMWPK	Generation 1A 2A		Wattage (UNV) 013 = 13 Watts 030 = 30 Watts 040 = 40 Watts 060 = 60 Watts Wattage (347V) 030 = 30 Watts 040 = 40 Watts	Voltage UNV = 120-277V 120 = 120V 347 = 347V	CRI 7≥70	Color Temp (CCT) 40 = 4000K 50 = 5000K		Optics CO = Cutoff Distribution		Color/Finish BZ = Bronze		Options Blank = No Option P = Photocontrol (120V only)

SYLVANIA

Photometric Data

SLMWPK2A/030UNV750/CO

Isofootcandle Lines at 15' Mounting Height

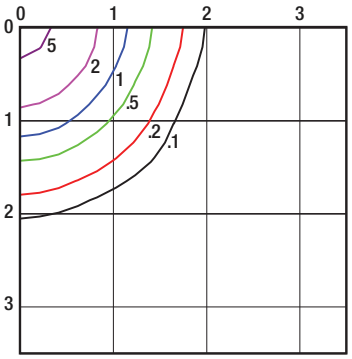

SLMWPK1A/040UNV750/CO (UNV/347V)

Isofootcandle Lines at 18' Mounting Height

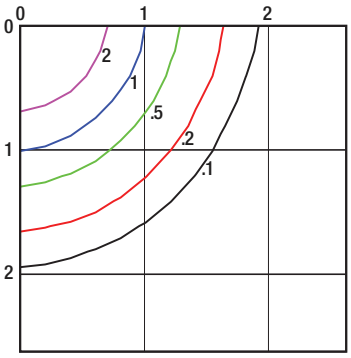

SLMWPK2A/060UNV750/CO

Isofootcandle Lines at 20' Mounting Height

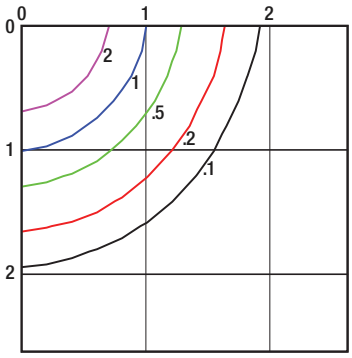

For other mounting heights apply the following multipliers:

Mounting Height	12'	15'	18'	20'	22'
Multiplier	1.56	1.00	0.69	0.56	0.46

Mounting Height	15'	18'	20'	22'	25'
Multiplier	1.44	1.00	0.81	0.67	0.52

Mounting Height	15'	18'	20'	22'	25'
Multiplier	1.78	1.23	1.00	0.83	0.64

Ordering Information

Item Number	Ordering Abbreviation	Power (W)	Input Voltage	CRI	Color Temp (CCT)	Distribution	Total Fixture Lumens	LPW*	DLC**	BUG Rating	Options	MTO***
74340	SLMWPK1A/013UNV740/CO/BZ	13	120-277V	>70	4000K	Cutoff	1400	113	Std	B1-U0-G1	–	
74341	SLMWPK1A/013UNV750/CO/BZ	13	120-277V	>70	5000K	Cutoff	1400	113	Std	B1-U0-G1	–	
74192	SLMWPK1A/030UNV740/CO/BZ	30	120-277V	>70	4000K	Cutoff	2800	92	Std	B1-U0-G1	–	
74193	SLMWPK1A/040UNV740/CO/BZ	40	120-277V	>70	4000K	Cutoff	4100	99	Std	B2-U0-G1	–	
74196	SLMWPK1A/040UNV750/CO/BZ	40	120-277V	>70	5000K	Cutoff	3900	98	Std	B2-U0-G1	–	
74194	SLMWPK1A/060UNV740/CO/BZ	60	120-277V	>70	4000K	Cutoff	5500	94	Std	B2-U0-G1	–	
74342	SLMWPK1A/013120740/CO/BZ/P	13	120V	>70	4000K	Cutoff	1400	113	Std	B1-U0-G1	Photocontrol	
74343	SLMWPK1A/013120750/CO/BZ/P	13	120V	>70	5000K	Cutoff	1400	113	Std	B1-U0-G1	Photocontrol	MTO
74204	SLMWPK1A/030120740/CO/BZ/P	30	120V	>70	4000K	Cutoff	2800	92	Std	B1-U0-G1	Photocontrol	MTO
74208	SLMWPK1A/040120750/CO/BZ/P	40	120V	>70	5000K	Cutoff	3900	98	Std	B2-U0-G1	Photocontrol	
74206	SLMWPK1A/060120740/CO/BZ/P	60	120V	>70	4000K	Cutoff	5500	94	Std	B2-U0-G1	Photocontrol	
72966	SLMWPK1A/030347750/CO/BZ	30	347V	>70	5000K	Cutoff	3400	109	Std	B1-U0-G1	–	
72992	SLMWPK1A/040347750/CO/BZ	40	347V	>70	5000K	Cutoff	4300	104	Std	B2-U0-G1	–	
74381	SLMWPK2A/030UNV750/CO/BZ	30	120-277V	>70	5000K	Cutoff	3300	112	Prm	B1-U0-G1	–	
74380	SLMWPK2A/060UNV740/CO/BZ	60	120-277V	>70	4000K	Cutoff	7000	117	Prm	B2-U0-G1	–	
74382	SLMWPK2A/060UNV750/CO/BZ	60	120-277V	>70	5000K	Cutoff	7200	121	Prm	B2-U0-G1	–	
74384	SLMWPK2A/030120750/CO/BZ/P	30	120V	>70	5000K	Cutoff	3300	112	Prm	B1-U0-G1	Photocontrol	MTO
74383	SLMWPK2A/060120740/CO/BZ/P	60	120V	>70	4000K	Cutoff	7000	117	Prm	B2-U0-G1	Photocontrol	
74385	SLMWPK2A/060120750/CO/BZ/P	60	120V	>70	5000K	Cutoff	7200	121	Prm	B2-U0-G1	Photocontrol	MTO

*LPW per LM79 report.
**Prm for DLC Premium; Std for DLC Standard
***Made To Order
For further information and to learn more about utility rebates, contact your local SYLVANIA sales representative.

Accessories and Replacement Parts

Item Number	Ordering Abbreviation	Item Description
74392	SLMWPK1A/JBOX/BZ	Junction Box, Bronze Finish
74393	SLMWPK1A/TRUNNION/BZ	Junction Box Trunnion Mount, Bronze Finish
74394	SLMWPK1A/KNUCKLE/BZ	Junction Box Knuckle Mount, Bronze Finish

LEDVANCE LLC
200 Ballardvale Street
Wilmington, MA 01887 USA
Phone 1-800-LIGHTBULB (1-800-544-4828)
www.sylvania.com

SYLVANIA and LEDVANCE are registered trademarks.
All other trademarks are those of their respective owners.
Licensee of product trademark SYLVANIA in general lighting.
Specifications subject to change without notice.

/sylvania /sylvania

© 2019 LEDVANCE LLC

SYLVANIA Luminaires

Wall Pack Cutoff

Catalog #	Type
Project	
Notes	
Date	
Prepared by	

Dimensions

Cutoff Wall Pack Generation 1

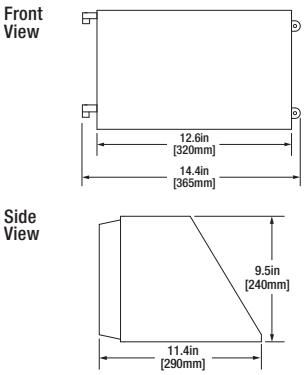

Cutoff Wall Pack Generation 2

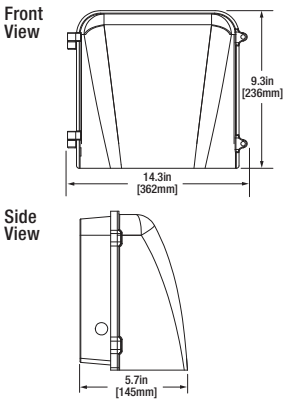

Product Features

The Wall Pack luminaires are environmentally preferable LED alternatives to traditional HID luminaires, offering up to 77% in energy savings. Ideal in place of traditional luminaires, or as new installations, the Wall Pack series is offered in seven wattages/lumen packages for illuminating building exteriors, outdoor corridors, walkways, and stairwells.

The housing is a perfect fit for replacing existing traditional luminaires and minimizes light pollution through its cut-off design. The luminaires are available with optional photo control. SYLVANIA luminaires assure optimum light engine performance for extended service and rated life (≥150,000 hours L_{70}).

Wattage Comparison Chart

Cutoff Wall Packs (UNV/347)

Traditional Source	Traditional System Wattage	LED System Wattage	Energy Savings
70W HPS	91	30 / 36 / 40	67% / 60% / 56%
100W HPS	120	30 / 36 / 40	75% / 70% / 67%
100W MH	130	30 / 36 / 40	77% / 72% / 69%
70W HPS	91	50 / 55	45% / 40%
100W HPS	120	50 / 55	58% / 54%
100W MH	130	50 / 55	62% / 58%
150W HPS	170	50 / 55	71% / 68%
150W MH	188	50 / 55	73% / 71%
175W MH	210	50 / 55	76% / 74%
175W MH	210	75 / 80	64% / 62%
250W MH	290	75 / 80	74% / 72%
250W HPS	295	75 / 80	75% / 73%

Specifications

Weight: Gen. 1 – UNV: 16.2lbs (7.4kg) 347V: 17lbs (7.9kg)
Gen. 2 – UNV: 9.9lbs (4.3kg)

Construction: Two-piece cast aluminum alloy housing with powder coat paint finish and a glass lens. This product is available in bronze and white (please see ordering information for further details).

LED System: LED system with a life rating of ≥150,000 hours at L_{70} @25°C. Luminaire efficacy up to 135 LPW.

Electrical: Offered in 30, 36, 50, and 75 Watts, the luminaire is designed to operate through the 120-277 VAC universal voltage range. Offered in 40 and 55 Watts, the luminaire is designed to operate at the 347VAC voltage range. The LED driver has a 4kV inherent surge suppression and is a constant current device, meeting UL1310 and UL48 Class 2 with built-in over temperature protection. The power factor is ≥90% and THD is ≤20%.

Color Characteristics: CRI>70; CCT of 4000K or 5000K.

Optics: Cutoff distribution with a flat tempered glass lens.

Options Available: Photocontrol, Emergency Battery Backup (MTO).

Installation: Luminaire mounts to exterior wall. External controls can be added through existing knockouts.

Operating Temperature: -40°F to +104°F (-40°C to +40°C)
EM: +32°F to +104°F (0°C to +40°C).

Listings: cULus listed to UL1598 standards for wet locations.

Warranty: Standard 5-year luminaire warranty (LEDLUM001).

Note: Specifications subject to change without notice. IES files available online.

*See page 2 for DLC listings.

Ordering Guide

Item Number:

WALPAK	XX	/	XXX	XXX	7	XX	/	CO	/	XX	/	X
Product Name WALPAK	Generation 1C 2C		Wattage (UNV) 030 = 30 Watts 036 = 36 Watts 050 = 50 Watts 075 = 75 Watts Wattage (347V) 040 = 40 Watts 055 = 55 Watts	Voltage UNV = 120-277V 347 = 347V	CRI 7 = >70	Color Temp (CCT) 40 = 4000K 50 = 5000K		Optics CO = Cutoff Distribution		Color/Finish BZ = Bronze WH = White		Options Blank = No Option P = Photocontrol* E = Emergency**

* Available in UNV only
** Made to order (MTO); Available in 50W UNV only

Ordering Information

Item Number	Ordering Abbreviation	Power (W)	Input Voltage	CRI	Color Temp (CCT)	Distribution	Total Fixture Lumens	LPW*	DLC**	BUG Rating	Color/ Finish	Options	MTO***
WALPAK1C													
74189	WALPAK1C/036UNV750/CO/BZ	36	120-277	>70	5000K	Cutoff	2900	82	–	B1-U0-G1	Bronze	–	
74190	WALPAK1C/050UNV750/CO/BZ	50	120-277	>70	5000K	Cutoff	5000	102	Std	B2-U0-G1	Bronze	–	
74213	WALPAK1C/036UNV750/CO/BZ/P	36	120-277	>70	5000K	Cutoff	2900	82	–	B1-U0-G1	Bronze	Photocontrol	
74215†	WALPAK1C/075UNV750/CO/BZ/P	75	120-277	>70	5000K	Cutoff	6400	88	–	B2-U0-G1	Bronze	Photocontrol	
74498†	WALPAK1C/050UNV750/CO/BZ/E	50	120-277	>70	5000K	Cutoff	5000	102	Std	B2-U0-G1	Bronze	Emergency	MTO
72993	WALPAK1C/040347750/CO/BZ	40	347	>70	5000K	Cutoff	4500	107	Std	B1-U0-G1	Bronze	–	
72994	WALPAK1C/055347750/CO/BZ	55	347	>70	5000K	Cutoff	5500	101	Std	B2-U0-G1	Bronze	–	
WALPAK2C													
74912	WALPAK2C/030UNV740/CO/BZ	30	120-277	>70	4000K	Cutoff	3800	135	Prm	B2-U1-G2	Bronze	–	
74915	WALPAK2C/030UNV750/CO/BZ	30	120-277	>70	5000K	Cutoff	3800	135	Prm	B2-U1-G2	Bronze	–	
74913	WALPAK2C/050UNV740/CO/BZ	50	120-277	>70	4000K	Cutoff	6200	126	Prm	B2-U1-G2	Bronze	–	
74916	WALPAK2C/050UNV750/CO/BZ	50	120-277	>70	5000K	Cutoff	6300	128	Prm	B2-U1-G2	Bronze	–	
74914	WALPAK2C/075UNV740/CO/BZ	75	120-277	>70	4000K	Cutoff	9000	120	Prm	B3-U1-G2	Bronze	–	
74917	WALPAK2C/075UNV750/CO/BZ	75	120-277	>70	5000K	Cutoff	9100	121	Prm	B3-U1-G2	Bronze	–	
75569	WALPAK2C/030UNV740/CO/BZ/P	30	120-277	>70	4000K	Cutoff	3800	135	Prm	B2-U1-G2	Bronze	Photocontrol	MTO
75572	WALPAK2C/030UNV750/CO/BZ/P	30	120-277	>70	5000K	Cutoff	3800	135	Prm	B2-U1-G2	Bronze	Photocontrol	MTO
75570	WALPAK2C/050UNV740/CO/BZ/P	50	120-277	>70	4000K	Cutoff	6200	126	Prm	B2-U1-G2	Bronze	Photocontrol	MTO
75573	WALPAK2C/050UNV750/CO/BZ/P	50	120-277	>70	5000K	Cutoff	6300	128	Prm	B2-U1-G2	Bronze	Photocontrol	MTO
75571	WALPAK2C/075UNV740/CO/BZ/P	75	120-277	>70	4000K	Cutoff	9000	120	Prm	B3-U1-G2	Bronze	Photocontrol	MTO
75574	WALPAK2C/075UNV750/CO/BZ/P	75	120-277	>70	5000K	Cutoff	9100	121	Prm	B3-U1-G2	Bronze	Photocontrol	MTO
60628	WALPAK2C/030UNV740/CO/WH	30	120-277	>70	4000K	Cutoff	3800	135	Prm	B2-U1-G2	White	–	
60629	WALPAK2C/030UNV750/CO/WH	30	120-277	>70	5000K	Cutoff	3800	135	Prm	B2-U1-G2	White	–	
60630	WALPAK2C/050UNV740/CO/WH	50	120-277	>70	4000K	Cutoff	6200	126	Prm	B3-U1-G2	White	–	
60631	WALPAK2C/050UNV750/CO/WH	50	120-277	>70	5000K	Cutoff	6300	128	Prm	B3-U1-G2	White	–	
65041	WALPAK2C/050UNV740/CO/BZ/E	50	120-277	>70	4000K	Cutoff	6200	126	Prm	B2-U1-G2	Bronze	Emergency	MTO
65042	WALPAK2C/050UNV750/CO/BZ/E	50	120-277	>70	5000K	Cutoff	6300	128	Prm	B2-U1-G2	Bronze	Emergency	MTO
65043	WALPAK2C/075UNV740/CO/BZ/E	75	120-277	>70	4000K	Cutoff	9000	120	Prm	B3-U1-G2	Bronze	Emergency	MTO
65044	WALPAK2C/075UNV750/CO/BZ/E	75	120-277	>70	5000K	Cutoff	9100	121	Prm	B3-U1-G2	Bronze	Emergency	MTO

*LPW per LM79 report.
**Prm for DLC Premium; Std for DLC Standard
***Made To Order
†Indicates this product is discontinued
For further information and to learn more about utility rebates, contact your local SYLVANIA sales representative.

Photometric Data (UNV/347V)

WALPAK2C/030UNV740/CO/BZ

Isofootcandle Lines at 15' Mounting Height

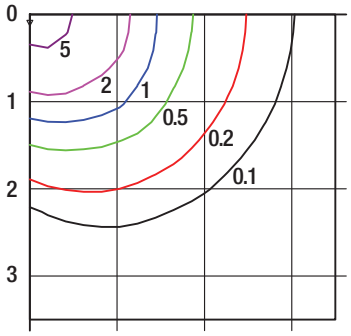

WALPAK2C/050UNV740/CO/BZ

Isofootcandle Lines at 18' Mounting Height

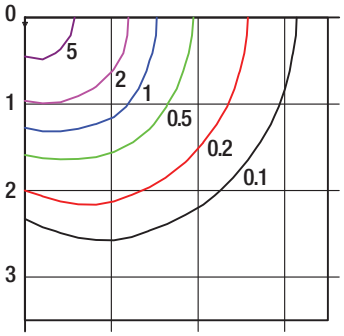

WALPAK2C/075UNV740/CO/BZ

Isofootcandle Lines at 20' Mounting Height

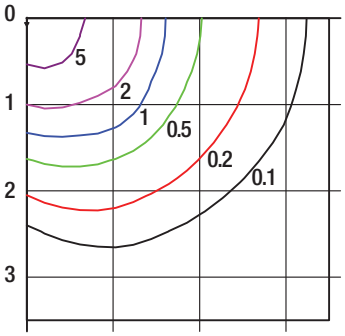

For other mounting heights apply the following multipliers:

Mounting Height	12'	15'	18'	20'	22'
Multiplier	1.56	1.00	0.69	0.56	0.46

Mounting Height	15'	18'	20'	22'	25'
Multiplier	1.44	1.00	0.81	0.67	0.52

Mounting Height	15'	18'	20'	22'	25'
Multiplier	1.78	1.23	1.00	0.83	0.64

Options Information

Emergency Battery Backup:

Activates when normal power supply to fixture fails, providing a minimum of 500 lumens for at least 90 minutes.

Accessories and Replacement Parts

Item Number	Ordering Abbreviation	Item Description
74396	WALPAK1C/LENS/BZ	Replacement Lens with Frame

LEDVANCE LLC
200 Ballardvale Street
Wilmington, MA 01887 USA
Phone 1-800-LIGHTBULB (1-800-544-4828)
www.sylvania.com

SYLVANIA and LEDVANCE are registered trademarks.
All other trademarks are those of their respective owners.
Licensee of product trademark SYLVANIA in general lighting.
Specifications subject to change without notice.

/sylvania /sylvania

© 2019 LEDVANCE LLC

SYLVANIA Luminaires

ValueLED™ Non-Cutoff Wall Pack

Item #	
Type	
Project	
Notes	
Date	

Application

The SYLVANIA ValueLED Wall Pack luminaires are environmentally preferable LED alternatives to traditional HID luminaires, offering up to 77% in energy savings. Ideal in place of traditional luminaires, or as new installations, the Wall Pack series is offered in several wattages/lumen packages for illuminating building exteriors, outdoor corridors, walkways, and stairwells.

Benefits and Features

- DLC listing maximizes rebate opportunities
- Traditional appearance allows for lowered installation costs
- Wide operating temperature (-40°C to +40°C) enables this product to be used in a variety of outdoor environments
- Up to 145 LPW
- 4000K and 5000K color temperature
- CRI >80
- Offered in 30, 50, 60, and 120 watts
- Energy savings up to 77%

Electrical

- 120-277VAC
- Power Factor >90%
- THD <20%
- 0-10V dimmable (60, 80, and 120W versions only)

Rated Life

- 50,000 hours (L_{70})

Warranty

- 5-year

Ambient Operating Range

- -40°F to 104°F (-40°C to 40°C)

Certifications and Listings

- cULus*
- RoHS
- FCC
- DLC

*cULus listed to UL1598 standards for wet locations

Wattage Comparison

Traditional Source	Traditional System Wattage	LED System Wattage	Energy Savings
70W HPS	91	30	67%
100W HPS	120	30	75%
100W MH	130	30	77%
70W HPS	91	50	45%
100W HPS	120	50	58%
100W MH	130	50	62%
150W HPS	170	60	65%
150W MH	188	60	68%
175W MH	210	60	71%
175W MH	210	80	62%
250W MH	290	80	72%
250W HPS	295	80	73%
320W MH	370	120	68%
400W HPS	460	120	74%
400W MH	450	120	73%

Installation

- Luminaire mounts to exterior wall.

Ordering Guide

WALPAKN	XX	/	XXX	UNV	X	8	XX	/	NC	/	BZ
Product Name WALPAKN = Non-Cutoff Wall Pack	Gen/Size 4A[1], 4B[2], 4C[3]		Wattage 030 = 30 Watts 050 = 50 Watts 060 = 60 Watts 080 = 80 Watts 120 = 120 Watts	Voltage UNV = 120-277V	Dimming Blank = non dimmable D = 0-10V (60, 80, 120W)	CRI 8 = >80	Color Temp 40 = 4000K 50 = 5000K		Distribution NC = Non-Cutoff		Color/Finish BZ= Bronze

1. 30W only
2. 50W, 60W, 80W only
3. 120W only

Ordering Information

Item Number	Ordering Abbreviation	Power (W)	Dimming	Input Voltage (V)	CRI	CCT	BUG Rating	Total Fixture Lumens	DLC	LPW	Color
61656	WALPAKN4A/030UNV840/NC/BZ	30	–	120-277	80	4000K	B1-U3-G3	4050	Prm	138	Bronze
61657	WALPAKN4A/030UNV850/NC/BZ	30	–	120-277	80	5000K	B1-U3-G3	4100	Prm	136	Bronze
61648	WALPAKN4B/050UNV840/NC/BZ	50	–	120-277	80	4000K	B1-U4-G4	7000	Prm	145	Bronze
61649	WALPAKN4B/050UNV850/NC/BZ	50	–	120-277	80	5000K	B1-U4-G4	7000	Prm	145	Bronze
61650	WALPAKN4B/060UNVD840/NC/BZ	60	0-10V	120-277	80	4000K	B1-U4-G5	8500	Prm	140	Bronze
61651	WALPAKN4B/060UNVD850/NC/BZ	60	0-10V	120-277	80	5000K	B1-U4-G5	8500	Prm	142	Bronze
61652	WALPAKN4B/080UNVD840/NC/BZ	80	0-10V	120-277	80	4000K	B2-U5-G5	11,300	Prm	144	Bronze
61653	WALPAKN4B/080UNVD850/NC/BZ	80	0-10V	120-277	80	5000K	B2-U5-G5	11,300	Prm	143	Bronze
61654	WALPAKN4C/120UNVD840/NC/BZ	120	0-10V	120-277	80	4000K	B3-U4-G5	16,200	Prm	137	Bronze
61655	WALPAKN4C/120UNVD850/NC/BZ	120	0-10V	120-277	80	5000K	B3-U4-G5	16,200	Prm	139	Bronze

Photometric Data

WALPAK4A 30W

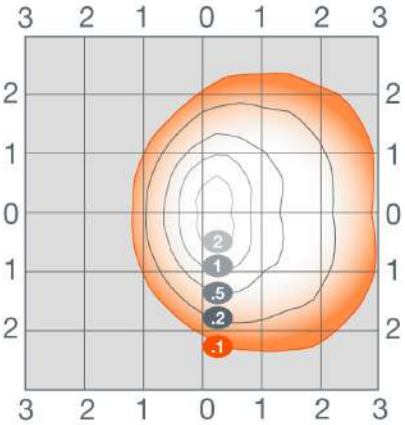

WALPAK4A 50W

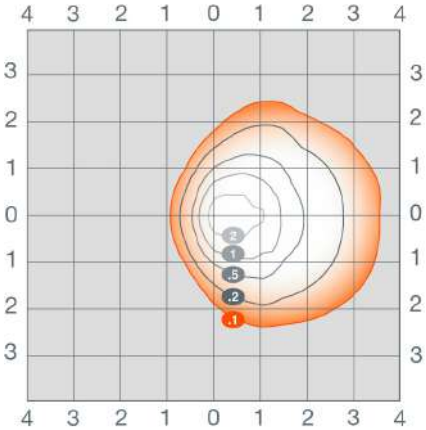

WALPAK4A 60W

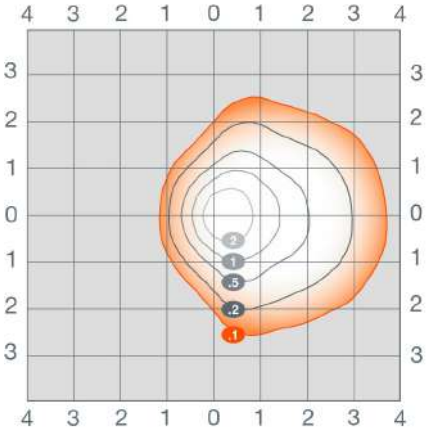

WALPAK4A 80W

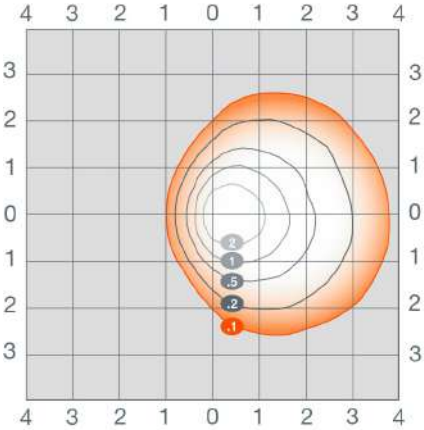

WALPAK4A 120W

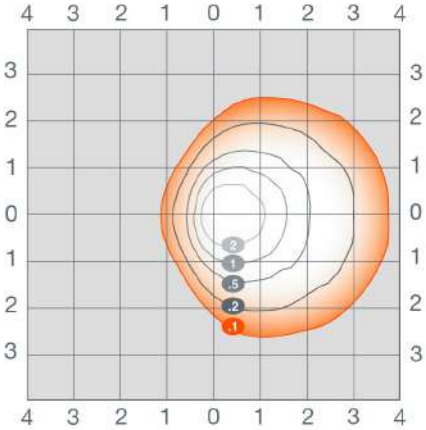

Physical Information

Luminaire Description	(A) Depth in (mm)	(B) Height in (mm)
WALPAK4A 30W	9.49 (241)	8.94 (227)
WALPAK4A 50-80W	7.46 (189.5)	9.29 (236)
WALPAK4A 120W	9.4 (238.7)	9.1 (231)

WALPAK4A 30W

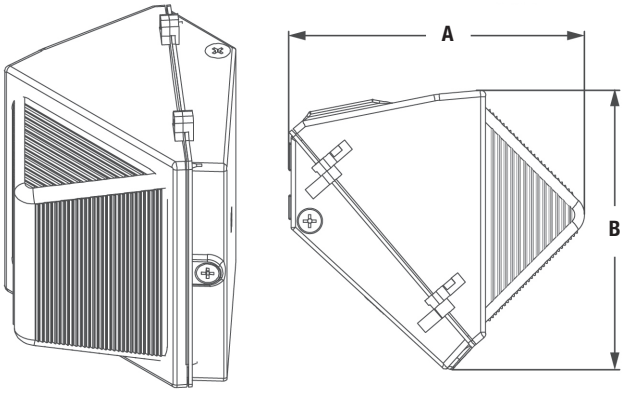

WALPAK4A 50-80W

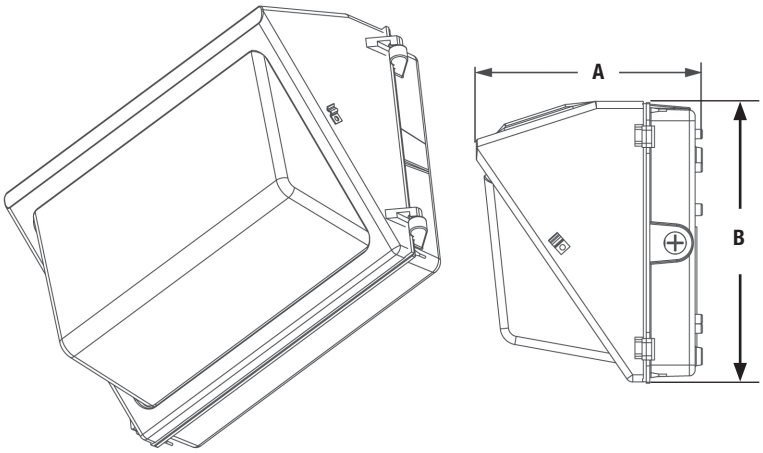

WALPAK4A 120W

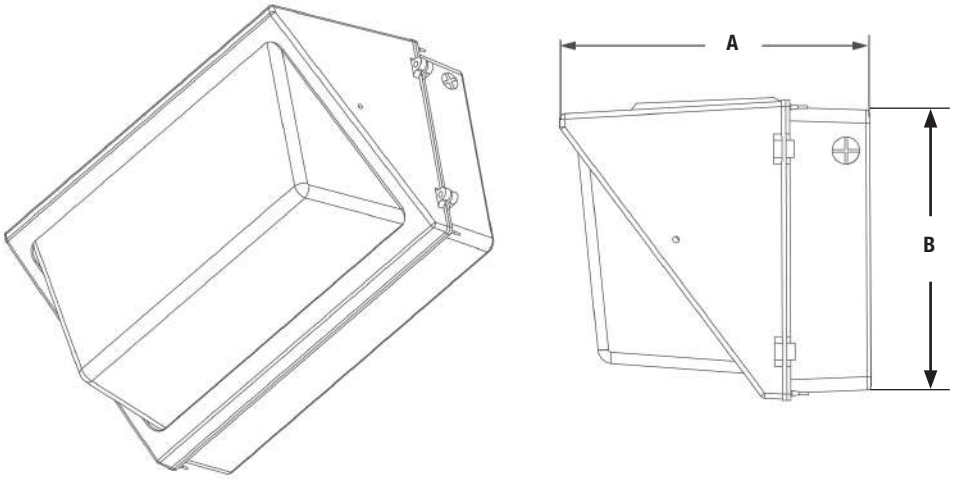

LEDVANCE LLC
200 Ballardvale Street
Wilmington, MA 01887 USA
Phone 1-800-LIGHTBULB (1-800-544-4828)
www.sylvania.com

SYLVANIA and LEDVANCE are registered trademarks.
All other trademarks are those of their respective owners.
Licensee of product trademark SYLVANIA in general lighting.
Specifications subject to change without notice.

/sylvania /sylvania

Name:
Email:
Phone:

© 2020 LEDVANCE LLC

SYLVANIA Luminaires

Wall Pack Non-Cutoff

Catalog #	Type
Project	
Notes	
Date	
Prepared by	

Dimensions

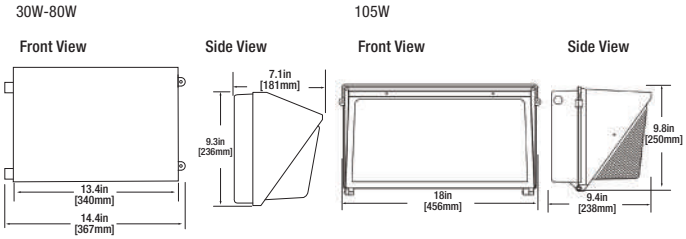

Product Features

The Wall Pack luminaires are environmentally preferable LED alternatives to traditional HID luminaires, offering up to 77% in energy savings. Ideal in place of traditional luminaires, or as new installations, the Wall Pack series is offered in several wattages/lumen packages for illuminating building exteriors, outdoor corridors, walkways, and stairwells.

The housing is a perfect fit for replacing existing traditional luminaires. The luminaires are available with optional photo control. SYLVANIA luminaires assure optimum light engine performance for extended service and rated life (≥150,000 hours L_{70}).

Wattage Comparison Chart

Non-Cutoff Wall Packs (UNV/347)

Traditional Source	Traditional System Wattage	LED System Wattage	Energy Savings
70W HPS	91	30 / 40	67% / 56%
100W HPS	120	30 / 40	75% / 67%
100W MH	130	30 / 40	77% / 69%
70W HPS	91	50 / 55	45% / 40%
100W HPS	120	50 / 55	58% / 54%
100W MH	130	50 / 55	62% / 58%
150W HPS	170	50 / 55	71% / 68%
150W MH	188	50 / 55	73% / 71%
175W MH	210	50 / 55	76% / 74%
175W MH	210	75 / 80	64% / 62%
250W MH	290	75 / 80	74% / 72%
250W HPS	295	75 / 80	75% / 73%
320W MH	370	105	72%
400W HPS	460	105	77%
400W MH	450	105	77%

Specifications

Weight: UNV: 13.8lbs (6.3kg) 347V: 15lbs (6.8kg)
UNV (105W): 16.5lbs (6.8kg)

Construction: Two-piece cast aluminum alloy housing with powder coat paint finish and a glass lens. This product is available in bronze and white (please see ordering information for further details).

LED System: LED system with a life rating of ≥150,000 hours at L_{70} @25°C. Luminaire efficacy up to 125 LPW.

Electrical: Offered in 30, 50, 75 and 105 Watts, the luminaire is designed to operate through the 120-277 VAC universal voltage range. Offered in 40, 55, and 80 Watts, the luminaire is designed to operate at the 347VAC voltage range. Offered in 50, 75, and 105 Watts, this luminaire is designed to operate through the 347-480 VAC high universal voltage range. The LED driver has a 4kV inherent surge suppression and is a constant current device, meeting UL1310 and UL48 Class 2 with built-in over temperature protection. The power factor is ≥90% and THD is ≤20%.

Color Characteristics: CRI>70; CCT of 4000K or 5000K.

Optics: Non-cutoff distribution with a borosilicate glass lens (top visor accessory available).

Options Available: Photocontrol, Emergency Battery Backup (MTO).

Installation: Luminaire mounts to exterior wall.

Operating Temperature: -40°F to +104°F (-40°C to +40°C);
EM: +32°F to +104°F (0°C to +40°C).

Listings: cULus listed to UL1598 standards for wet locations.

Warranty: Standard 5-year luminaire warranty (LEDLUM001).

Note: Specifications subject to change without notice. IES files available online.

*See page 2 for DLC listings.

Ordering Guide

Item Number:

WALPAK	XX	/	XXX	XXX	7	XX	/	NC	/	XX	/	X
Product Name WALPAK	Generation 1N 2N 3N		Wattage (UNV) 030 = 30 Watts 050 = 50 Watts 075 = 75 Watts 105 = 105 Watts Wattage (347V) 040 = 40 Watts 055 = 55 Watts 080 = 80 Watts Wattage (HUV) 050 = 50 Watts 075 = 75 Watts 105 = 105 Watts	Voltage UNV = 120-277V 347 = 347V HUV = 347-480V	7 = >70	Color Temp (CCT) 40 = 4000K 50 = 5000K		Optics NC = Non-cutoff Distribution		Color/Finish BZ = Bronze WH = White		Options Blank = No Options P = Photocontrol* E = Emergency**

*Available in UNV only
**Made To Order (MTO); Available in 50W UNV only

Ordering Information

Item Number	Ordering Abbreviation	Power (W)	Input Voltage	CRI	Color Temp (CCT)	Distribution	Total Fixture Lumens	LPW*	DLC**	BUG Rating	Color/ Finish	Options	MTO***
WALPAK1N													
74217	WALPAK1N/050UNV740/NC/BZ/P	50	120-277	>70	4000K	Type IV	5000	104	–	B1-U4-G3	Bronze	Photocontrol	
72996	WALPAK1N/040347750/NC/BZ	40	347	>70	5000K	Type IV	4300	102	–	B1-U4-G3	Bronze	–	
72997	WALPAK1N/055347750/NC/BZ	55	347	>70	5000K	Type IV	6300	108	–	B1-U4-G3	Bronze	–	
72998	WALPAK1N/080347750/NC/BZ	80	347	>70	5000K	Type IV	9400	120	Std	B1-U5-G5	Bronze	–	
WALPAK2N													
74386	WALPAK2N/030UNV740/NC/BZ	30	120-277	>70	4000K	Type IV	3400	122	Prm	B1-U4-G3	Bronze	–	
74482	WALPAK2N/030UNV750/NC/BZ	30	120-277	>70	5000K	Type IV	3500	125	Prm	B1-U3-G3	Bronze	–	
74485	WALPAK2N/050UNV740/NC/BZ	50	120-277	>70	4000K	Type IV	5500	113	Std	B1-U4-G3	Bronze	–	
74486	WALPAK2N/050UNV750/NC/BZ	50	120-277	>70	5000K	Type IV	5600	116	Std	B1-U4-G3	Bronze	–	
74489	WALPAK2N/075UNV740/NC/BZ	75	120-277	>70	4000K	Type IV	8900	118	Std	B1-U5-G5	Bronze	–	
74490	WALPAK2N/075UNV750/NC/BZ	75	120-277	>70	5000K	Type IV	9200	121	Std	B1-U5-G5	Bronze	–	
74387	WALPAK2N/030UNV740/NC/BZ/P	30	120-277	>70	4000K	Type IV	3400	122	Prm	B1-U4-G3	Bronze	Photocontrol	
74483	WALPAK2N/030UNV750/NC/BZ/P	30	120-277	>70	5000K	Type IV	3500	125	Prm	B1-U3-G3	Bronze	Photocontrol	
74487	WALPAK2N/050UNV740/NC/BZ/P	50	120-277	>70	4000K	Type IV	5500	113	Std	B1-U4-G3	Bronze	Photocontrol	
74488	WALPAK2N/050UNV750/NC/BZ/P	50	120-277	>70	5000K	Type IV	5600	116	Std	B1-U4-G3	Bronze	Photocontrol	
74491	WALPAK2N/075UNV740/NC/BZ/P	75	120-277	>70	4000K	Type IV	8900	118	Std	B1-U5-G5	Bronze	Photocontrol	
74492	WALPAK2N/075UNV750/NC/BZ/P	75	120-277	>70	5000K	Type IV	9200	121	Std	B1-U5-G5	Bronze	Photocontrol	
60567	WALPAK2N/050HUV740/NC/BZ	50	347-480	>70	4000K	Type IV	5500	113	Std	B1-U4-G3	Bronze	–	MTO
60568	WALPAK2N/050HUV750/NC/BZ	50	347-480	>70	5000K	Type IV	5600	116	Std	B1-U4-G3	Bronze	–	MTO
60569	WALPAK2N/075HUV740/NC/BZ	75	347-480	>70	4000K	Type IV	8900	118	Std	B1-U5-G5	Bronze	–	MTO
60570	WALPAK2N/075HUV750/NC/BZ	75	347-480	>70	5000K	Type IV	9200	121	Std	B1-U5-G5	Bronze	–	MTO
60622	WALPAK2N/030UNV740/NC/WH	30	120-277	>70	4000K	Type IV	3400	122	Prm	B1-U4-G3	White	–	
60623	WALPAK2N/030UNV750/NC/WH	30	120-277	>70	5000K	Type IV	3500	125	Prm	B1-U3-G3	White	–	
60624	WALPAK2N/050UNV740/NC/WH	50	120-277	>70	4000K	Type IV	5500	113	Std	B1-U4-G3	White	–	
60625	WALPAK2N/050UNV750/NC/WH	50	120-277	>70	5000K	Type IV	5600	116	Std	B1-U4-G3	White	–	
60626	WALPAK2N/075UNV740/NC/WH	75	120-277	>70	4000K	Type IV	8900	118	Std	B1-U5-G5	White	–	
60627	WALPAK2N/075UNV750/NC/WH	75	120-277	>70	5000K	Type IV	9200	121	Std	B1-U5-G5	White	–	
65045	WALPAK2N/050UNV740/NC/BZ/E	50	120-277	>70	4000K	Type IV	5500	113	Std	B1-U4-G3	Bronze	Emergency Battery Backup	MTO
65046	WALPAK2N/050UNV750/NC/BZ/E	50	120-277	>70	5000K	Type IV	5600	116	Std	B1-U4-G3	Bronze	Emergency Battery Backup	MTO
65047	WALPAK2N/075UNV740/NC/BZ/E	75	120-277	>70	4000K	Type IV	8900	118	Std	B1-U5-G5	Bronze	Emergency Battery Backup	MTO
65048	WALPAK2N/075UNV750/NC/BZ/E	75	120-277	>70	5000K	Type IV	9200	121	Std	B1-U5-G5	Bronze	Emergency Battery Backup	MTO
WALPAK3N													
60571	WALPAK3N/105HUV740/NC/BZ	105	347-480	>70	4000K	Type IV	12,500	119	Std	B3-U4-G4	Bronze	–	MTO
60572	WALPAK3N/105HUV750/NC/BZ	105	347-480	>70	5000K	Type IV	12,400	118	Std	B2-U4-G5	Bronze	–	MTO
74528	WALPAK3N/105UNV740/NC/BZ	105	120-277	>70	4000K	Type IV	12,500	119	Std	B3-U4-G4	Bronze	–	
74529	WALPAK3N/105UNV750/NC/BZ	105	120-277	>70	5000K	Type IV	12,400	118	Std	B2-U4-G5	Bronze	–	
60145	WALPAK3N/105UNV740/NC/BZ/P	105	120-277	>70	4000K	Type IV	12,500	119	Std	B3-U4-G4	Bronze	Photocontrol	MTO
60146	WALPAK3N/105UNV750/NC/BZ/P	105	120-277	>70	5000K	Type IV	12,400	118	Std	B2-U4-G5	Bronze	Photocontrol	MTO

*LPW per LM79 report.
**Prm for DLC Premium; Std for DLC Standard
***Made To Order
For further information and to learn more about utility rebates, contact your local SYLVANIA sales representative.

Photometric Data

WALPAK2N/030UNV750/NC

Isofootcandle Lines at
15' Mounting Height

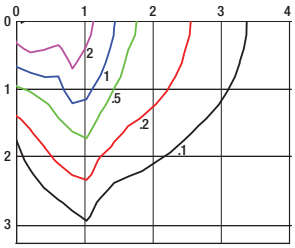

WALPAK2N/050UNV750/NC

Isofootcandle Lines at
18' Mounting Height

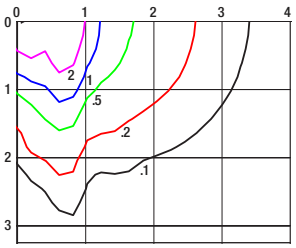

WALPAK2N/075UNV750/NC

Isofootcandle Lines at
20' Mounting Height

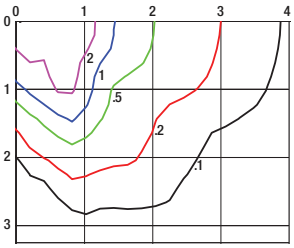

WALPAK3N/105UNV740/NC

Isofootcandle Lines at
25' Mounting Height

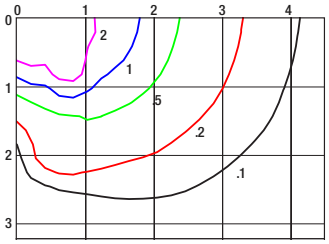

For other mounting heights apply the following multipliers:

Mounting Height	12'	15'	18'	20'	22'
Multiplier	1.56	1.00	0.69	0.56	0.46

Mounting Height	15'	18'	20'	22'	25'
Multiplier	1.44	1.00	0.81	0.67	0.52

Mounting Height	15'	18'	20'	22'	25'
Multiplier	1.78	1.23	1.00	0.83	0.64

Mounting Height	22'	25'	30'	32'	35'
Multiplier	1.29	1.00	0.69	0.61	0.51

Options Information

Emergency Battery Backup:

Activates when normal power supply to fixture fails, providing a minimum of 500 lumens for at least 90 minutes.

Accessories and Replacement Parts

30W-80W

Item Number	Ordering Abbreviation	Item Description
74390	WALPAK1N/TOPVISOR/BZ	Top Visor, Bronze Finish
74391	WALPAK1N/WIREGUARD	Wire Guard
74397	WALPAK1N/LENS/BZ	Replacement Glass Lens with Frame
74445	WALPAK1N/PCLENS/BZ	Polycarbonate Lens with Frame

105W

Item Number	Ordering Abbreviation	Item Description
74539	WALPAK3N/TOPVISOR/BZ	Top Visor, Bronze Finish
74540	WALPAK3N/WIREGUARD	Wire Guard
74595	WALPAK3N/LENS	Replacement Glass Lens with Frame

Top Visor

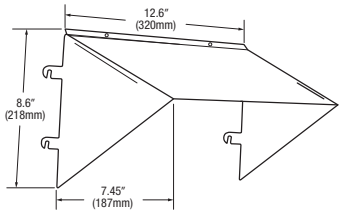

Wire Guard

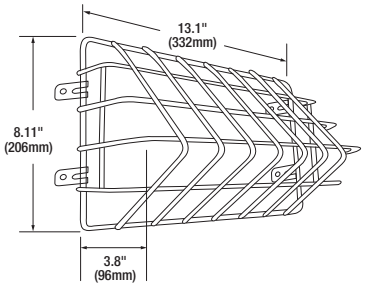

Top Visor

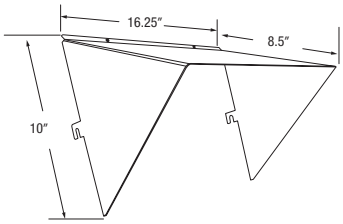

Wire Guard

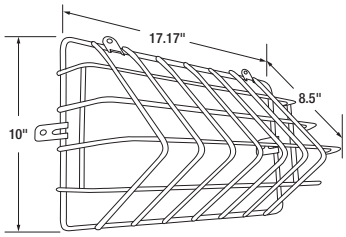

LEDVANCE LLC
200 Ballardvale Street
Wilmington, MA 01887 USA
Phone 1-800-LIGHTBULB (1-800-544-4828)
www.sylvania.com

SYLVANIA and LEDVANCE are registered trademarks.
All other trademarks are those of their respective owners.
Licensee of product trademark SYLVANIA in general lighting.
Specifications subject to change without notice.

/sylvania /sylvania

© 2019 LEDVANCE LLC

SYLVANIA Luminaires

Small Wall Pack

Catalog #	Type
Project	
Notes	
Date	
Prepared by	

Dimensions

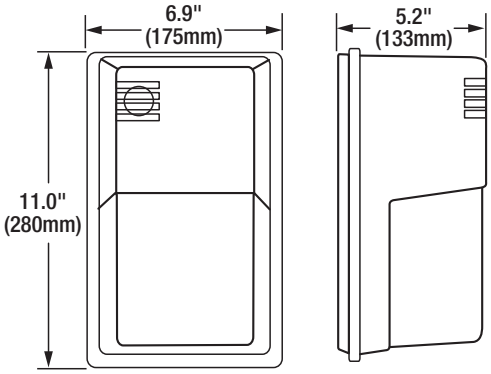

Product Features

- Up to 90% energy savings while maintaining traditional design
- Available with optional photocontrol for additional energy savings
- Low maintenance and long life (L_{70} ≥150,000 hours)

Specifications

Weight: 4.8lbs (2.2kg)

Construction: Aluminum alloy back plate with polycarbonate front cover. Epoxy paint finish. The standard color is bronze.

LED System: LED system with a life rating of ≥150,000 hours at L_{70} @25°C. Luminaire efficacy up to 119 LPW.

Electrical: Offered in 15 Watts, the luminaire is designed to operate through the 120-277 VAC universal voltage range. The LED driver has a 4kV inherent surge suppression and is a constant current device, meeting UL1310 and UL48 Class 2 with built-in over temperature protection. The fixture power factor is ≥90% and THD is ≤20%.

Color Characteristics: CRI>70; CCT of 4000K or 5000K.

Optics: Non-Cutoff distribution with polycarbonate lens.

Options Available: Photocontrol.

Installation: Luminaire mounts to exterior wall. Level included in back plate.

Operating Temperature: -40°F to +104°F (-40°C to +40°C).

Listings: cULus listed to UL1598 standards for wet locations.

Warranty: Standard 5-year luminaire warranty (LEDLUM001).

Note: Specifications subject to change without notice. IES files available online.

Wattage Comparison Chart

Small Wall Pack

Traditional Source	Traditional System Wattage	LED System Wattage	Energy Savings
23W CFL	23	15	35%
35W HPS	45	15	67%
42W CFL	46	15	67%
50W HPS	62	15	76%
50W MH	62	15	76%
100W Inc	100	15	85%
150W Inc	150	15	90%

Ordering Guide

Item Number:

SMWLPAK	1N	/	XXX	UNV	7	XX	/	NC	/	BZ	/	X
Product Name SMWLPAK	Generation 1N		Wattage 015 = 15W	Voltage UNV = 120-277V	CRI 7 ≥70	Color Temp (CCT) 40 = 4000K 50 = 5000K		Optics NC = Non-Cutoff Distribution		Color/Finish BZ = Bronze		Options Blank = No Option P = Photocontrol

Ordering Information

Item Number	Ordering Abbreviation	Power (W)	Input Voltage	CRI	Color Temp (CCT)	Distribution	Total Fixture Lumens	LPW*	DLC**	BUG Rating	Options
60064	SMWLPAK1N/015UNV740/NC/BZ	15	120-277	>70	4000K	Type I	1700	119	Std	B1-U0-G1	–
60065	SMWLPAK1N/015UNV750/NC/BZ	15	120-277	>70	5000K	Type I	1700	119	Std	B1-U0-G1	–
60066	SMWLPAK1N/015UNV740/NC/BZ/P	15	120-277	>70	4000K	Type I	1700	119	Std	B1-U0-G1	Photocell
60067	SMWLPAK1N/015UNV750/NC/BZ/P	15	120-277	>70	5000K	Type I	1700	119	Std	B1-U0-G1	Photocell

*LPW per LM79 report
**Std for DLC Standard.
For further information and to learn more about utility rebates, contact your local SYLVANIA sales representative.

LEDVANCE LLC
200 Ballardvale Street
Wilmington, MA 01887 USA
Phone 1-800-LIGHTBULB (1-800-544-4828)
www.sylvania.com

SYLVANIA and LEDVANCE are registered trademarks.
All other trademarks are those of their respective owners.
Licensee of product trademark SYLVANIA in general lighting.
Specifications subject to change without notice.

/sylvania /sylvania

© 2019 LEDVANCE LLC

SYLVANIA Luminaires

Area Light

Item #	
Type	
Project	
Notes	
Date	

Application

The Area Light luminaires are the perfect alternative to traditional lighting technologies offering a variety of solutions to illuminate parking lots, parking garage roofs and general area lighting.

Benefits and Features

- Integrated photocontrol receptacle compatible with up to 7 pin photosensors. Shorting Cap is included.
- Slim design with multiple mounting and distribution options
- Robust fixture with IP66 and 3G Vibration rating
- Up to 137 LPW
- 4000K and 5000K color temperature
- CRI 80+
- Offered in 70, 110, 145, 220 and 290 watts
- Type III, IV, V distribution
- Energy savings up to 74%
- UV stabilized polycarbonate lens

Electrical

- 120-277 VAC or 347-480 VAC options
- Power factor ≥90%
- THD ≤20%
- 0-10V dimmable
- Constant current LED driver with 4kV surge suppression

Rated Life

- ≥140,000 hours (L_{70})

Warranty

- Standard 5-year luminaire warranty (LEDLUM001)
- Limited 10-year luminaire warranty (LEDLUM003)

Ambient Operating Range

- -40°F to +104°F (-40°C to +40°C)

Certifications and Listings

- cULus listed to UL1598 standards for wet locations and IP66 rated
- Driver meets UL1310 and UL48 Class I

Wattage Comparison

Traditional Source	Traditional System Wattage	LED System Wattage	Energy Savings
100W HPS	120	70	42%
100W MH	130	70	46%
150W HPS	170	70	59%
150W MH	188	70	63%
175W MH	210	70	67%
175W MH	210	110	48%
250W HPS	295	110	63%
250W MH	290	110	62%
250W HPS	295	145	51%
250W MH	290	145	50%
320W MH	370	145	61%
400W HPS	460	145	68%
400W MH	450	145	68%
750W MH	820	220	73%
750W HPS	840	220	74%
1000W MH	1080	290	73%
1000W HPS	1100	290	74%

Installation

- Fixture mounting options include: square pole, round pole, wall mount, trunnion mounting, or slip fitter mount for 2-1/8" to 2-3/8" tenon. Flood light mounting up to 45° angle. Do not mount lens facing upwards. Mounting accessories sold separately.

Ordering Guide

AREAFLD	1A	/	XXX	UNV	D	8	XX	/	XX	/	XX	/	X
Product Name AREAFLD	Generation 1A		Wattage 070 = 70W 110 = 110W 145 = 145W 220 = 220W 290 = 290W	Voltage UNV = 120-277V HUV = 347-480V	Dimming D = 0-10V	CRI 8 = >80	Color Temp (CCT) 40 = 4000K 50 = 5000K		Distribution T3 = Type III T4 = Type IV T5 = Type V		Color/Finish BZ = Bronze WH = White		Options Blank = No Options D = Motion/ Daylight Sensor

Ordering Information

Item Number	Ordering Abbreviation	Wattage (W)	Input Voltage	Dimming	CRI	Color Temp (CCT)	Distribution	Total Fixture Lumens	LPW*	DLC**	Options	BUG Rating	MTO***
70956	AREAFLD1A/070UNVD840/T3/BZ	70	120-277	0-10V	>80	4000K	Type III	8,100	116	Prm	–	B2-U2-G2	–
71078	AREAFLD1A/070UNVD840/T4/BZ	70	120-277	0-10V	>80	4000K	Type IV	8,200	117	Prm	–	B2-U2-G2	MTO
71079	AREAFLD1A/070UNVD840/T5/BZ	70	120-277	0-10V	>80	4000K	Type V	8,500	121	Prm	–	B2-U2-G1	MTO
71153	AREAFLD1A/070UNVD850/T3/BZ	70	120-277	0-10V	>80	5000K	Type III	8,600	123	Prm	–	B2-U2-G2	–
71170	AREAFLD1A/070UNVD850/T4/BZ	70	120-277	0-10V	>80	5000K	Type IV	8,700	125	Prm	–	B2-U2-G2	MTO
71171	AREAFLD1A/070UNVD850/T5/BZ	70	120-277	0-10V	>80	5000K	Type V	9,000	130	Prm	–	B2-U2-G1	MTO
60632	AREAFLD1A/070UNVD840/T3/WH	70	120-277	0-10V	>80	4000K	Type III	8,100	116	Prm	–	B2-U2-G2	MTO
60633	AREAFLD1A/070UNVD840/T4/WH	70	120-277	0-10V	>80	4000K	Type IV	8,200	117	Prm	–	B2-U2-G2	–
60634	AREAFLD1A/070UNVD840/T5/WH	70	120-277	0-10V	>80	4000K	Type V	8,500	121	Prm	–	B2-U2-G1	MTO
60635	AREAFLD1A/070UNVD850/T3/WH	70	120-277	0-10V	>80	5000K	Type III	8,600	123	Prm	–	B2-U2-G2	MTO
60636	AREAFLD1A/070UNVD850/T4/WH	70	120-277	0-10V	>80	5000K	Type IV	8,700	125	Prm	–	B2-U2-G2	–
60637	AREAFLD1A/070UNVD850/T5/WH	70	120-277	0-10V	>80	5000K	Type V	9,000	130	Prm	–	B2-U2-G1	MTO
60386	AREAFLD1A/070HUVD840/T3/BZ	70	347-480	0-10V	>80	4000K	Type III	8,100	116	Prm	–	B2-U2-G2	MTO
60387	AREAFLD1A/070HUVD840/T4/BZ	70	347-480	0-10V	>80	4000K	Type IV	8,200	117	Prm	–	B2-U2-G2	MTO
60388	AREAFLD1A/070HUVD840/T5/BZ	70	347-480	0-10V	>80	4000K	Type V	8,500	121	Prm	–	B2-U2-G1	
60389	AREAFLD1A/070HUVD850/T3/BZ	70	347-480	0-10V	>80	5000K	Type III	8,600	123	Prm	–	B2-U2-G2	MTO
60390	AREAFLD1A/070HUVD850/T4/BZ	70	347-480	0-10V	>80	5000K	Type IV	8,700	125	Prm	–	B2-U2-G2	MTO
60391	AREAFLD1A/070HUVD850/T5/BZ	70	347-480	0-10V	>80	5000K	Type V	9,000	130	Prm	–	B2-U2-G1	–
60037	AREAFLD1A/110UNVD840/T3/BZ	110	120-277	0-10V	>80	4000K	Type III	12,600	117	Prm	–	B3-U2-G2	–
60038	AREAFLD1A/110UNVD840/T4/BZ	110	120-277	0-10V	>80	4000K	Type IV	12,700	117	Prm	–	B3-U2-G2	MTO
60039	AREAFLD1A/110UNVD840/T5/BZ	110	120-277	0-10V	>80	4000K	Type V	13,300	123	Prm	–	B3-U2-G1	MTO
60040	AREAFLD1A/110UNVD850/T3/BZ	110	120-277	0-10V	>80	5000K	Type III	13,300	124	Prm	–	B3-U2-G3	–
60041	AREAFLD1A/110UNVD850/T4/BZ	110	120-277	0-10V	>80	5000K	Type IV	13,300	125	Prm	–	B3-U2-G2	MTO
60042	AREAFLD1A/110UNVD850/T5/BZ	110	120-277	0-10V	>80	5000K	Type V	13,300	124	Prm	–	B3-U2-G2	MTO
60638	AREAFLD1A/110UNVD840/T3/WH	110	120-277	0-10V	>80	4000K	Type III	12,600	117	Prm	–	B3-U2-G2	MTO
60639	AREAFLD1A/110UNVD840/T4/WH	110	120-277	0-10V	>80	4000K	Type IV	12,700	117	Prm	–	B3-U2-G2	–
60640	AREAFLD1A/110UNVD840/T5/WH	110	120-277	0-10V	>80	4000K	Type V	13,300	123	Prm	–	B3-U2-G1	MTO
60641	AREAFLD1A/110UNVD850/T3/WH	110	120-277	0-10V	>80	5000K	Type III	13,300	124	Prm	–	B3-U2-G2	MTO
60642	AREAFLD1A/110UNVD850/T4/WH	110	120-277	0-10V	>80	5000K	Type IV	13,300	125	Prm	–	B3-U2-G2	–
60643	AREAFLD1A/110UNVD850/T5/WH	110	120-277	0-10V	>80	5000K	Type V	13,300	124	Prm	–	B3-U2-G1	MTO
60392	AREAFLD1A/110HUVD840/T3/BZ	110	347-480	0-10V	>80	4000K	Type III	12,600	117	Prm	–	B3-U2-G2	MTO
60393	AREAFLD1A/110HUVD840/T4/BZ	110	347-480	0-10V	>80	4000K	Type IV	12,700	117	Prm	–	B3-U2-G1	MTO
60394	AREAFLD1A/110HUVD840/T5/BZ	110	347-480	0-10V	>80	4000K	Type V	13,300	123	Prm	–	B3-U2-G3	–
60395	AREAFLD1A/110HUVD850/T3/BZ	110	347-480	0-10V	>80	5000K	Type III	13,300	124	Prm	–	B3-U2-G3	MTO
60396	AREAFLD1A/110HUVD850/T4/BZ	110	347-480	0-10V	>80	5000K	Type IV	13,300	125	Prm	–	B3-U2-G2	MTO
60397	AREAFLD1A/110HUVD850/T5/BZ	110	347-480	0-10V	>80	5000K	Type V	13,300	124	Prm	–	B3-U2-G2	–
60031	AREAFLD1A/145UNVD840/T3/BZ	145	120-277	0-10V	>80	4000K	Type III	17,000	116	Prm	–	B3-U2-G3	–
60032	AREAFLD1A/145UNVD840/T4/BZ	145	120-277	0-10V	>80	4000K	Type IV	17,100	117	Prm	–	B3-U2-G3	MTO
60033	AREAFLD1A/145UNVD840/T5/BZ	145	120-277	0-10V	>80	4000K	Type V	17,900	122	Prm	–	B4-U2-G2	MTO
60034	AREAFLD1A/145UNVD850/T3/BZ	145	120-277	0-10V	>80	5000K	Type III	17,000	117	Prm	–	B3-U2-G3	–
60035	AREAFLD1A/145UNVD850/T4/BZ	145	120-277	0-10V	>80	5000K	Type IV	17,000	117	Prm	–	B3-U2-G3	MTO
60036	AREAFLD1A/145UNVD850/T5/BZ	145	120-277	0-10V	>80	5000K	Type V	17,900	123	Prm	–	B4-U2-G2	MTO
60644	AREAFLD1A/145UNVD840/T3/WH	145	120-277	0-10V	>80	4000K	Type III	17,000	116	Prm	–	B3-U2-G3	MTO
60645	AREAFLD1A/145UNVD840/T4/WH	145	120-277	0-10V	>80	4000K	Type IV	17,100	117	Prm	–	B3-U2-G3	–
60646	AREAFLD1A/145UNVD840/T5/WH	145	120-277	0-10V	>80	4000K	Type V	17,900	122	Prm	–	B4-U2-G2	MTO
60647	AREAFLD1A/145UNVD850/T3/WH	145	120-277	0-10V	>80	5000K	Type III	17,000	117	Prm	–	B3-U2-G3	MTO
60648	AREAFLD1A/145UNVD850/T4/WH	145	120-277	0-10V	>80	5000K	Type IV	17,000	117	Prm	–	B3-U2-G3	–
60649	AREAFLD1A/145UNVD850/T5/WH	145	120-277	0-10V	>80	5000K	Type V	17,900	123	Prm	–	B4-U2-G2	MTO
60380	AREAFLD1A/145HUVD840/T3/BZ	145	347-480	0-10V	>80	4000K	Type III	17,000	116	Prm	–	B3-U2-G3	MTO
60381	AREAFLD1A/145HUVD840/T4/BZ	145	347-480	0-10V	>80	4000K	Type IV	17,100	117	Prm	–	B3-U2-G3	MTO
60382	AREAFLD1A/145HUVD840/T5/BZ	145	347-480	0-10V	>80	4000K	Type V	17,900	122	Prm	–	B4-U2-G2	–
60383	AREAFLD1A/145HUVD850/T3/BZ	145	347-480	0-10V	>80	5000K	Type III	17,000	117	Prm	–	B3-U2-G3	MTO
60384	AREAFLD1A/145HUVD850/T4/BZ	145	347-480	0-10V	>80	5000K	Type IV	17,000	117	Prm	–	B3-U2-G3	MTO
60385	AREAFLD1A/145HUVD850/T5/BZ	145	347-480	0-10V	>80	5000K	Type V	17,900	123	Prm	–	B4-U2-G2	–
60226	AREAFLD1A/220UNVD840/T3/BZ	220	120-277	0-10V	>80	4000K	Type III	27,900	128	Prm	–	B4-U3-G3	MTO
60227	AREAFLD1A/220UNVD840/T4/BZ	220	120-277	0-10V	>80	4000K	Type IV	28,500	130	Prm	–	B4-U3-G3	MTO
60228	AREAFLD1A/220UNVD840/T5/BZ	220	120-277	0-10V	>80	4000K	Type V	29,000	130	Prm	–	B4-U3-G2	–
60229	AREAFLD1A/220UNVD850/T3/BZ	220	120-277	0-10V	>80	5000K	Type III	27,900	128	Prm	–	B4-U3-G3	MTO
60230	AREAFLD1A/220UNVD850/T4/BZ	220	120-277	0-10V	>80	5000K	Type IV	28,500	130	Prm	–	B4-U3-G3	MTO
60231	AREAFLD1A/220UNVD850/T5/BZ	220	120-277	0-10V	>80	5000K	Type V	29,000	130	Prm	–	B4-U3-G2	–

*LPW per LM79 report
**Prm for DLC Premium
***Made to Order

Ordering Information (continued)

Item Number	Ordering Abbreviation	Wattage (W)	Input Voltage	Dimming	CRI	Color Temp (CCT)	Distribution	Total Fixture Lumens	LPW*	DLC**	Options	BUG Rating	MTO***
61465	AREAFLD1A/290UNVD840/T3/BZ	290	120-277	0-10V	>80	4000K	Type III	39,600	137	Prm	–	B4-U3-G3	MTO
61466	AREAFLD1A/290UNVD840/T4/BZ	290	120-277	0-10V	>80	4000K	Type IV	39,600	137	Prm	–	B4-U3-G3	–
61467	AREAFLD1A/290UNVD840/T5/BZ	290	120-277	0-10V	>80	4000K	Type V	39,600	137	Prm	–	B4-U3-G2	MTO
61468	AREAFLD1A/290UNVD850/T3/BZ	290	120-277	0-10V	>80	5000K	Type III	39,600	137	Prm	–	B4-U3-G3	MTO
61469	AREAFLD1A/290UNVD850/T4/BZ	290	120-277	0-10V	>80	5000K	Type IV	39,600	137	Prm	–	B4-U3-G3	–
61470	AREAFLD1A/290UNVD850/T5/BZ	290	120-277	0-10V	>80	5000K	Type V	39,600	137	Prm	–	B4-U3-G2	MTO
60232	AREAFLD1A/220HUVD840/T3/BZ	220	347-480	0-10V	>80	4000K	Type III	27,900	128	Prm	–	B4-U3-G3	MTO
60233	AREAFLD1A/220HUVD840/T4/BZ	220	347-480	0-10V	>80	4000K	Type IV	28,500	130	Prm	–	B4-U3-G3	MTO
60234	AREAFLD1A/220HUVD840/T5/BZ	220	347-480	0-10V	>80	4000K	Type V	29,000	130	Prm	–	B4-U3-G2	–
60235	AREAFLD1A/220HUVD850/T3/BZ	220	347-480	0-10V	>80	5000K	Type III	27,900	128	Prm	–	B4-U3-G3	MTO
60236	AREAFLD1A/220HUVD850/T4/BZ	220	347-480	0-10V	>80	5000K	Type IV	28,500	130	Prm	–	B4-U3-G3	MTO
60237	AREAFLD1A/220HUVD850/T5/BZ	220	347-480	0-10V	>80	5000K	Type V	29,000	130	Prm	–	B4-U3-G2	–
60083	AREAFLD1A/070UNVD840/T3/BZ/D	70	120-277	0-10V	>80	4000K	Type III	8,100	116	Prm	Sensor	B2-U2-G2	MTO
60084	AREAFLD1A/070UNVD840/T4/BZ/D	70	120-277	0-10V	>80	4000K	Type IV	8,200	117	Prm	Sensor	B2-U2-G2	MTO
60085	AREAFLD1A/070UNVD840/T5/BZ/D	70	120-277	0-10V	>80	4000K	Type V	8,500	121	Prm	Sensor	B2-U2-G2	MTO
60086	AREAFLD1A/070UNVD850/T3/BZ/D	70	120-277	0-10V	>80	5000K	Type III	8,600	123	Prm	Sensor	B2-U2-G2	MTO
60087	AREAFLD1A/070UNVD850/T4/BZ/D	70	120-277	0-10V	>80	5000K	Type IV	8,700	125	Prm	Sensor	B2-U2-G1	MTO
60088	AREAFLD1A/070UNVD850/T5/BZ/D	70	120-277	0-10V	>80	5000K	Type V	9,000	130	Prm	Sensor	B3-U2-G1	MTO
60089	AREAFLD1A/110UNVD840/T3/BZ/D	110	120-277	0-10V	>80	4000K	Type III	12,600	117	Prm	Sensor	B3-U2-G2	MTO
60090	AREAFLD1A/110UNVD840/T4/BZ/D	110	120-277	0-10V	>80	4000K	Type IV	12,700	117	Prm	Sensor	B3-U2-G2	MTO
60091	AREAFLD1A/110UNVD840/T5/BZ/D	110	120-277	0-10V	>80	4000K	Type V	13,300	123	Prm	Sensor	B3-U2-G1	MTO
60092	AREAFLD1A/110UNVD850/T3/BZ/D	110	120-277	0-10V	>80	5000K	Type III	13,300	124	Prm	Sensor	B3-U2-G3	MTO
60093	AREAFLD1A/110UNVD850/T4/BZ/D	110	120-277	0-10V	>80	5000K	Type IV	13,300	125	Prm	Sensor	B3-U2-G2	MTO
60094	AREAFLD1A/110UNVD850/T5/BZ/D	110	120-277	0-10V	>80	5000K	Type V	13,300	124	Prm	Sensor	B3-U2-G3	MTO
60095	AREAFLD1A/145UNVD840/T3/BZ/D	145	120-277	0-10V	>80	4000K	Type III	17,000	116	Prm	Sensor	B3-U2-G3	MTO
60096	AREAFLD1A/145UNVD840/T4/BZ/D	145	120-277	0-10V	>80	4000K	Type IV	17,100	117	Prm	Sensor	B4-U2-G2	MTO
60097	AREAFLD1A/145UNVD840/T5/BZ/D	145	120-277	0-10V	>80	4000K	Type V	17,900	122	Prm	Sensor	B3-U2-G3	MTO
60098	AREAFLD1A/145UNVD850/T3/BZ/D	145	120-277	0-10V	>80	5000K	Type III	17,000	117	Prm	Sensor	B3-U2-G3	MTO
60099	AREAFLD1A/145UNVD850/T4/BZ/D	145	120-277	0-10V	>80	5000K	Type IV	17,000	117	Prm	Sensor	B3-U2-G3	MTO
60100	AREAFLD1A/145UNVD850/T5/BZ/D	145	120-277	0-10V	>80	5000K	Type V	17,900	123	Prm	Sensor	B3-U2-G3	MTO
61337	AREAFLD1A/070HUVD840/T3/WH	70	347-480	0-10V	>80	4000K	Type III	8100	116	Prm	–	B2-U2-G2	MTO
61338	AREAFLD1A/070HUVD840/T4/WH	70	347-480	0-10V	>80	4000K	Type IV	8200	117	Prm	–	B2-U2-G2	MTO
61339	AREAFLD1A/070HUVD840/T5/WH	70	347-480	0-10V	>80	4000K	Type V	8500	121	Prm	–	B2-U2-G1	–
61340	AREAFLD1A/070HUVD850/T3/WH	70	347-480	0-10V	>80	5000K	Type III	8600	123	Prm	–	B2-U2-G2	MTO
61341	AREAFLD1A/070HUVD850/T4/WH	70	347-480	0-10V	>80	5000K	Type IV	8700	125	Prm	–	B2-U2-G2	MTO
61342	AREAFLD1A/070HUVD850/T5/WH	70	347-480	0-10V	>80	5000K	Type V	9000	130	Prm	–	B2-U2-G1	–
61343	AREAFLD1A/110HUVD840/T3/WH	110	347-480	0-10V	>80	4000K	Type III	12,600	117	Prm	–	B3-U2-G2	MTO
61344	AREAFLD1A/110HUVD840/T4/WH	110	347-480	0-10V	>80	4000K	Type IV	12,700	117	Prm	–	B3-U2-G2	MTO
61345	AREAFLD1A/110HUVD840/T5/WH	110	347-480	0-10V	>80	4000K	Type V	13,300	123	Prm	–	B3-U2-G1	MTO
61346	AREAFLD1A/110HUVD850/T3/WH	110	347-480	0-10V	>80	5000K	Type III	13,300	124	Prm	–	B3-U2-G2	MTO
61347	AREAFLD1A/110HUVD850/T4/WH	110	347-480	0-10V	>80	5000K	Type IV	13,300	125	Prm	–	B3-U2-G2	MTO
61348	AREAFLD1A/110HUVD850/T5/WH	110	347-480	0-10V	>80	5000K	Type V	13,300	124	Prm	–	B3-U2-G1	MTO
61349	AREAFLD1A/145HUVD840/T3/WH	145	347-480	0-10V	>80	4000K	Type III	17,000	116	Prm	–	B3-U2-G3	MTO
61350	AREAFLD1A/145HUVD840/T4/WH	145	347-480	0-10V	>80	4000K	Type IV	17,100	117	Prm	–	B3-U2-G3	MTO
61351	AREAFLD1A/145HUVD840/T5/WH	145	347-480	0-10V	>80	4000K	Type V	17,900	122	Prm	–	B4-U2-G2	–
61352	AREAFLD1A/145HUVD850/T3/WH	145	347-480	0-10V	>80	5000K	Type III	17,000	117	Prm	–	B3-U2-G3	MTO
61353	AREAFLD1A/145HUVD850/T4/WH	145	347-480	0-10V	>80	5000K	Type IV	17,000	117	Prm	–	B3-U2-G3	MTO
61354	AREAFLD1A/145HUVD850/T5/WH	145	347-480	0-10V	>80	5000K	Type V	17,900	123	Prm	–	B4-U2-G2	–
61355	AREAFLD1A/220UNVD840/T3/WH	220	120-277	0-10V	>80	4000K	Type III	27,900	128	Prm	–	B4-U3-G3	–
61356	AREAFLD1A/220UNVD840/T4/WH	220	120-277	0-10V	>80	4000K	Type IV	27,900	128	Prm	–	B4-U3-G3	MTO
61357	AREAFLD1A/220UNVD840/T5/WH	220	120-277	0-10V	>80	4000K	Type V	27,900	128	Prm	–	B4-U3-G2	MTO
61358	AREAFLD1A/220UNVD850/T3/WH	220	120-277	0-10V	>80	5000K	Type III	27,900	128	Prm	–	B4-U3-G3	–
61359	AREAFLD1A/220UNVD850/T4/WH	220	120-277	0-10V	>80	5000K	Type IV	27,900	128	Prm	–	B4-U3-G3	MTO
61360	AREAFLD1A/220UNVD850/T5/WH	220	120-277	0-10V	>80	5000K	Type V	27,900	128	Prm	–	B4-U3-G2	MTO
61361	AREAFLD1A/220HUVD840/T3/WH	220	347-480	0-10V	>80	4000K	Type III	27,900	128	Prm	–	B4-U3-G3	MTO
61362	AREAFLD1A/220HUVD840/T4/WH	220	347-480	0-10V	>80	4000K	Type IV	28,500	130	Prm	–	B4-U3-G3	MTO
61363	AREAFLD1A/220HUVD840/T5/WH	220	347-480	0-10V	>80	4000K	Type V	29,000	130	Prm	–	B4-U3-G2	–
61364	AREAFLD1A/220HUVD850/T3/WH	220	347-480	0-10V	>80	5000K	Type III	27,900	128	Prm	–	B4-U3-G3	MTO
61365	AREAFLD1A/220HUVD850/T4/WH	220	347-480	0-10V	>80	5000K	Type IV	28,500	130	Prm	–	B4-U3-G3	MTO
61366	AREAFLD1A/220HUVD850/T5/WH	220	347-480	0-10V	>80	5000K	Type V	29,000	130	Prm	–	B4-U3-G2	–
61720	AREAFLD1A/290HUVD840/T3/BZ	290	347-480	0-10V	>80	4000K	Type III	39,600	137	Prm	–	B4-U3-G3	MTO
61721	AREAFLD1A/290HUVD840/T4/BZ	290	347-480	0-10V	>80	4000K	Type VI	39,600	137	Prm	–	B4-U3-G3	MTO
61722	AREAFLD1A/290HUVD840/T5/BZ	290	347-480	0-10V	>80	4000K	Type VI	39,600	137	Prm	–	B4-U3-G2	MTO
61723	AREAFLD1A/290HUVD850/T3/BZ	290	347-480	0-10V	>80	5000K	Type III	39,600	137	Prm	–	B4-U3-G3	MTO
61724	AREAFLD1A/290HUVD850/T4/BZ	290	347-480	0-10V	>80	5000K	Type VI	39,600	137	Prm	–	B4-U3-G3	MTO
61725	AREAFLD1A/290HUVD850/T5/BZ	290	347-480	0-10V	>80	5000K	Type VI	39,600	137	Prm	–	B4-U3-G2	MTO

*LPW per LM79 report
**Prm for DLC Premium
***Made to Order

For further information and to learn more about utility rebates, contact your local SYLVANIA sales representative.

Options Information

Sensor: Dual Motion/Daylight sensor available.
Max Mounting Height: 50ft

Default Sensor Settings
Brightness: 100%
Sensitivity: 100%
Hold time: 5 minutes
Standby Dim: 30%
Standby Time: 60 minutes
Daylight Sensor: Sunlight

BRI816H Coverage

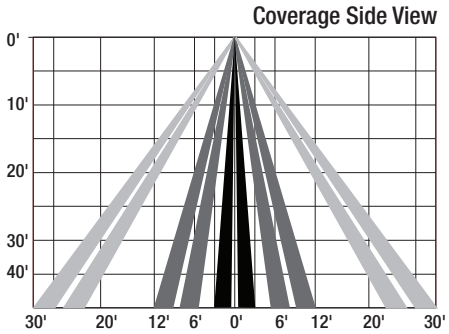

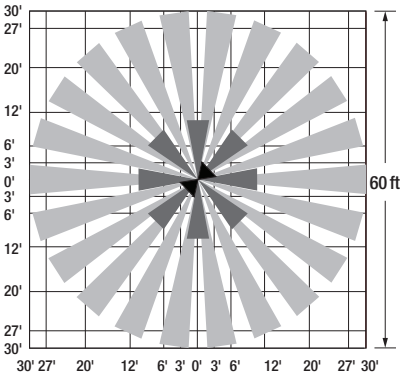

Additional Specifications

- Specifications subject to change without notice. IES files available online.
- Cast aluminum alloy housing with powder coat paint finish and UV stabilized polycarbonate lens. The standard colors are bronze and white.

Photometrics

70W Type III Distribution
Isofootcandle Lines at 15' Mounting Height

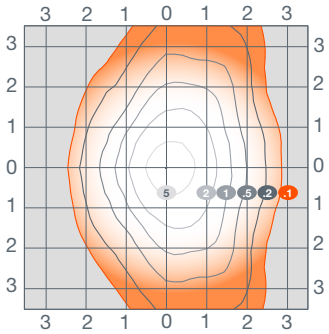

70W Type IV Distribution
Isofootcandle Lines at 15' Mounting Height

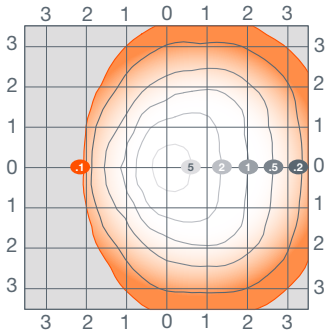

70W Type V Distribution
Isofootcandle Lines at 15' Mounting Height

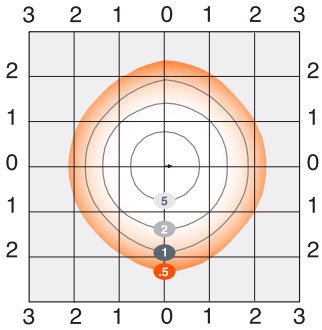

For other mounting heights apply the following multipliers:

Mounting Height	10'	12'	15'	18'	20'	25'
Multiplier	2.25	1.56	1.00	0.69	0.56	0.36

110W Type III Distribution
Isofootcandle Lines at 20' Mounting Height

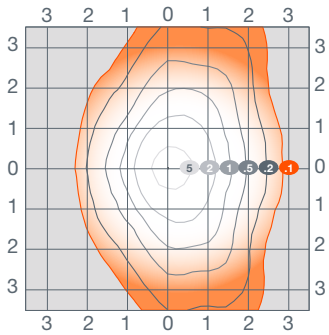

110W Type IV Distribution
Isofootcandle Lines at 20' Mounting Height

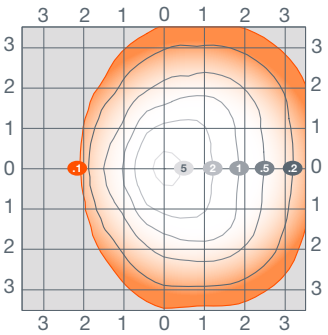

110W and 145W Type V Distribution
Isofootcandle Lines at 20' Mounting Height

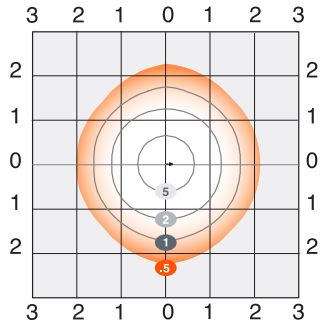

For other mounting heights apply the following multipliers:

Mounting Height	15'	18'	20'	22'	25'	30'
Multiplier	1.78	1.23	1.00	0.83	0.64	0.44

For 145W use 1.4 multiplier.

Photometrics (continued)

145W Type III Distribution
Isofootcandle Lines at 20' Mounting Height

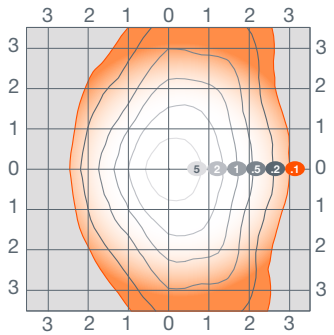

145W Type IV Distribution
Isofootcandle Lines at 20' Mounting Height

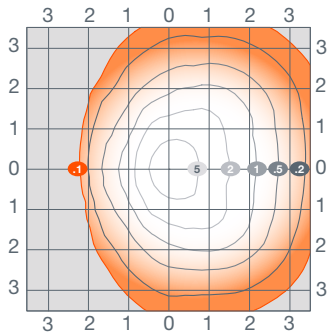

110W and 145W Type V Distribution
Isofootcandle Lines at 20' Mounting Height

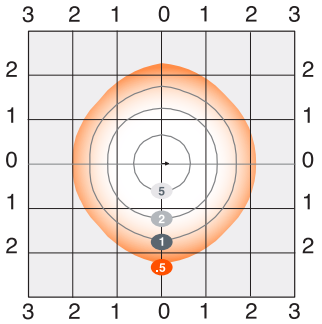

For other mounting heights apply the following multipliers:

Mounting Height	15'	18'	20'	22'	25'	30'
Multiplier	1.78	1.23	1.00	0.83	0.64	0.44

For 145W use 1.4 multiplier.

220W and 290W Type III Distribution
Isofootcandle Lines at 25' Mounting Height

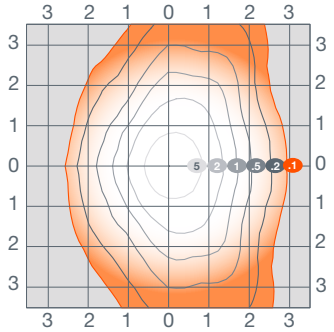

220W and 290W Type IV Distribution
Isofootcandle Lines at 25' Mounting Height

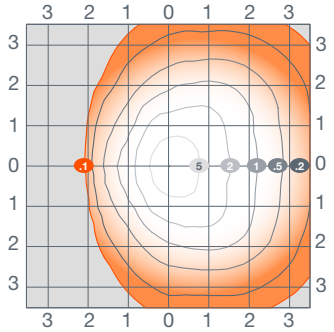

220W and 290W Type V Distribution
Isofootcandle Lines at 25' Mounting Height

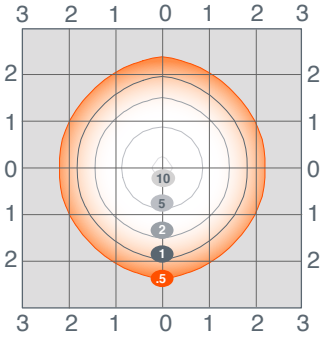

For other mounting heights apply the following multipliers:

Mounting Height	15'	20'	22'	25'	30'	35'
Multiplier	2.78	1.56	1.29	1.00	0.69	0.51

Physical Information

Lamp Description	(A) Length	(B) Width	(C) Height
70W	12.2 in (309.8 mm)	12.5 in (318 mm)	4.3 in (108.5 mm)
100/145W	15.2 in (386 mm)	12.5 in (318 mm)	4.3 in (108.5 mm)
220W/290W	20.9 in (530.9 mm)	12.5 in (318 mm)	4.3 in (108.5 mm)

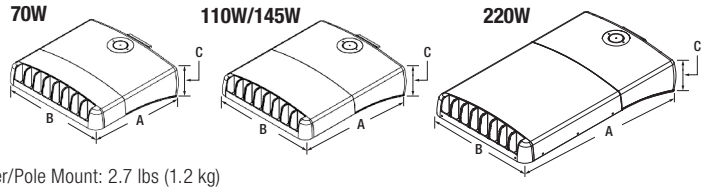

Weight: 70W: 9.7 lbs (4.4 kg) 110/145W: 11.5 lbs (5.2 kg) 220W: 18.5 lbs (8.4 kg) Slip Fitter/Pole Mount: 2.7 lbs (1.2 kg)

EPA (Effective Projected Area): 70W: Pole Mount 0.32ft^2, Slip Fitter 0.90ft^2 110/145W: Pole Mount 0.46ft^2, Slip Fitter 1.12ft^2 220W/290W: Pole Mount 0.79ft^2, Slip Fitter 1.54ft^2

Mounting Accessories

Item Number	Ordering Abbreviation	Item Description
71734	AREAFLD1A/SLIPFITTER/BZ	Slip Fitter Mount, Bronze
60130	AREAFLD1A/WALLTENON/BZ	Wall Tenon Mount, Bronze (Requires Slip Fitter)
71733	AREAFLD1A/POLEMOUNT/BZ	Pole Mount, Bronze
60128	AREAFLD1A/RNDADAPT/BZ	Round Adapter, Bronze (Requires Pole Mount)
60129	AREAFLD1A/WALLMNT/BZ	Wall Mount, Bronze (Requires Pole Mount)
60165	AREAFLD1ATRUNNION/BZ	Trunnion, Bronze
60163	AREAFLD1A/VISOR01/BZ	Visor, Bronze, 70W
60164	AREAFLD1A/VISOR02/BZ	Visor, Bronze, 110/145W
61400	AREAFLD1A/VISOR03/BZ	Visor, Bronze, 220W/290W
60650	AREAFLD1A/POLEMOUNT/WH	Pole Mount, White
60651	AREAFLD1A/SLIPFITTER/WH	Slip Fitter Mount, White
60652	AREAFLD1A/WALLMNT/WH	Wall Mount, White (Requires Pole Mount)

Visor

60163

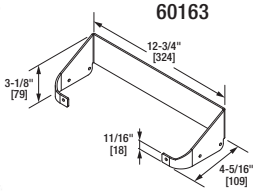

60164

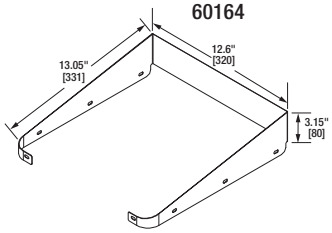

Trunnion (60165)

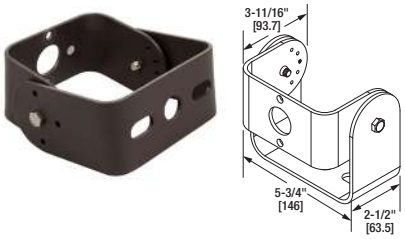

Slip Fitter Mount (71734 or 60651)

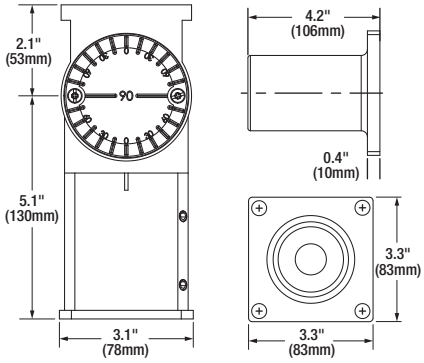

Wall Tenon Mount (60130)

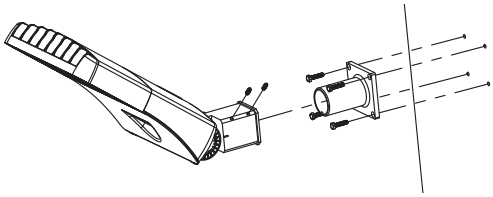

Round Pole Adapter (60128)

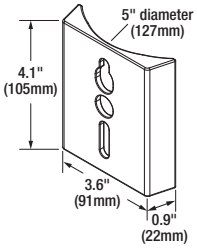

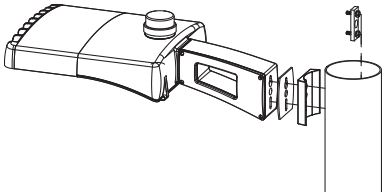

Pole Mount (71733 or 60650)

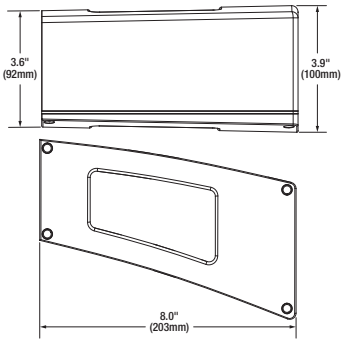

Wall Mount (60129 or 60652)

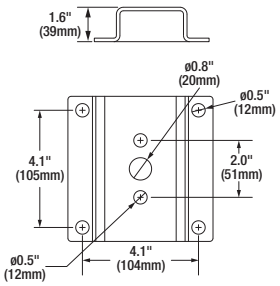

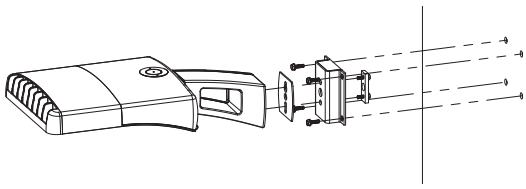

Poles

Product Features

- Poles available in three heights: 20', 25', and 30'
- 20' and 25' poles are 4" square; 30' pole is 5" square
- Offered in 11 gauge
- Fabricated from the highest grade structural steel

Specifications

- Square steel pole with powder coat paint. The standard color is bronze
- Polycarbonate spring loaded top cover
- Pre-drilled mounting holes on all 4 sides with Polycarbonate grommets
- Reinforced 3" x 6" cast iron hand-hole with ground screw included
- Easily secured base cover included
- Bolt circle template included

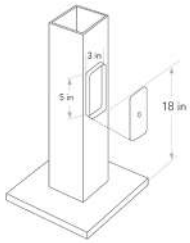

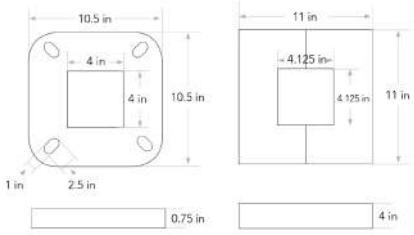

4x4 Anchor Base Included

Base Plate Cover Included Packaged Separately

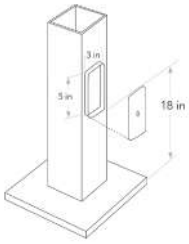

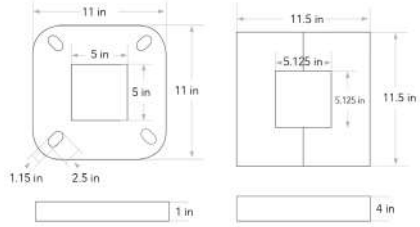

5x5 Anchor Base Included

Base Plate Cover Included Packaged Separately

Ordering Guide

POLESQS	1A	/	XX	/	XXG	/	XXIN	/	BZ
Product Name	Generation		Height		Gauge		Size		Finish
POLESQS =	1A		20 = 20 feet		11G = 11		04IN = 4 inches		Bronze
Square Straight Pole			25 = 25 feet				05IN = 5 inches		
			30 = 30 feet						

Ordering Information (Poles)

Item Number	Ordering Abbreviation	Shape	Height (ft)	Gauge (in)	Size (in)	Finish
60659	POLESQS1A/20/11G/4IN/BZ	SquareStraight	20	11	4	Bronze
60661	POLESQS1A/25/11G/4IN/BZ	SquareStraight	25	11	4	Bronze
60663	POLESQS1A/30/11G/5IN/BZ	SquareStraight	30	11	5	Bronze
60664	POLESQS1A/30/07G/5IN/BZ	SquareStraight	30	7	5	Bronze

Ordering Information (Accessories)

Item Number	Ordering Abbreviation	Description	Compatibility
60665	POLESQS1A/ANJBOLTKIT/304	3/4" x 30" Anchor Bolt Kit (set of 4 bolts)	For use with 60659 and 60661
60666	POLESQS1A/ANJBOLTKIT/364	1" x 36" Anchor Bolt Kit (set of 4 bolts)	For use with 60663
60667	POLESQS1A/TENON/4IN/BZ	4" Tenon Mount, Bronze Finish	For use with 60659 and 60661
60668	POLESQS1A/TENON/5IN/BZ	5" Tenon Mount, Bronze Finish	For use with 60663
65013*	POLESQS1A/DBLTENON/4IN/BZ	4" Double Tenon Bracket, Bronze Finish	For use with 60659 and 60661
65014*	POLESQS1A/DBLTENON/5IN/BZ	5" Double Tenon Bracket, Bronze Finish	For use with 60663
65015	POLESQS1A/DBLBULHORN/4IN/BZ	4" Double Bullhorn Bracket, Bronze Finish	For use with 60659 and 60661
65016	POLESQS1A/DBLBULHORN/5IN/BZ	5" Double Bullhorn Bracket, Bronze Finish	For use with 60663
60845	POLESQS1A/TPLBULHORN/4IN/BZ	4" Triple Bullhorn Bracket, Bronze Finish	For use with 60659 and 60661
60846	POLESQS1A/TPLBULHORN/5IN/BZ	5" Triple Bullhorn Bracket, Bronze Finish	For use with 60663
65112	POLESQS1A/QUADTENON/4IN/BZ	4" Quad Tenon Bracket, Bronze Finish	For use with 60659 and 60661
65113	POLESQS1A/QUADTENON/5IN/BZ	5" Quad Tenon Bracket, Bronze Finish	For use with 60663

For further information and to learn more about utility rebates, contact your local SYLVANIA sales representative.
*These mounting accessories require 60667 or 60668 for proper installation.

NAED 60665 – 3/4" x 30"

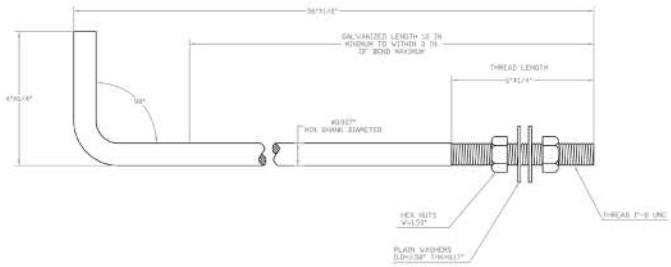

NAED 60666 – 1" x 36"

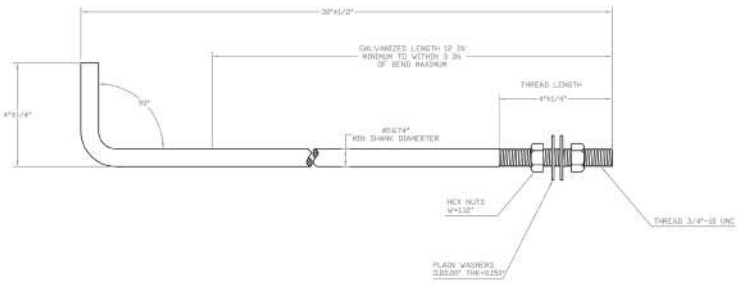

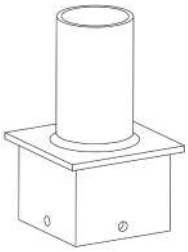

Tenon

NAED 60667 – 4 inch
NAED 60668 – 5 inch

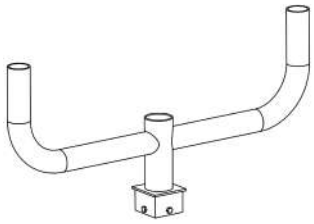

Double Bullhorn

NAED 65015 – 4 inch
NAED 65016 – 5 inch

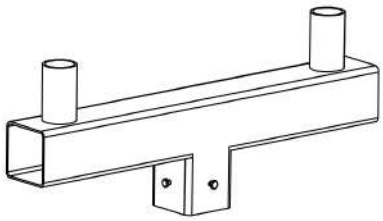

Double Tenon

NAED 65013 – 4 inch
NAED 65014 – 5 inch

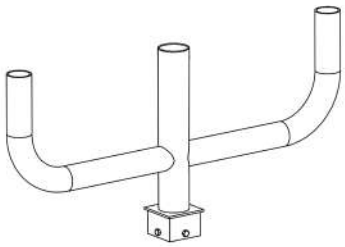

Triple Bullhorn

NAED 60845 – 4 inch
NAED 60846 – 5 inch

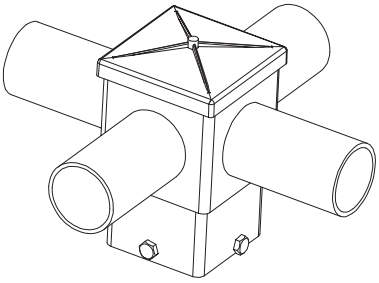

Quad Tenon

NAED 65112 – 4 inch
NAED 65113 – 5 inch

Maximum EPA Loading per Pole

Ordering Abbreviation	85 MPH	90 MPH	100 MPH	110 MPH	120 MPH	130 MPH	140 MPH
POLE1A/SQ/20/11	10.4	8.7	6	4	2.6	1.4	0.5
POLE1A/SQ/25/11	5	3.8	1.8	0.4	–	–	–
POLE1A/SQ/30/11	7	5.4	3	1.3	0.2	–	–

Fixture Pole Loading – Pole Mount

Pole Description	100 MPH			110 MPH			120 MPH			130 MPH			140 MPH	
	# Area-70	# Area-110/145	# Area-220	# Area-70	# Area-110/145	# Area-220	# Area-70	# Area-110/145	# Area-220	# Area-70	# Area-110/145	# Area-220	# Area-70	# Area-110/145
POLESQS1A/20/11G/4IN/BZ	18	13	7	12	8	5	8	5	3	4	3	1	1	1
POLESQS1A/25/11G/4IN/BZ	5	3	2	1	0	0	0	0	0	0	0	0	0	0
POLESQS1A/30/11G/4IN/BZ	9	6	3	4	2	1	0	0	0	0	0	0	0	0

Fixture Pole Loading – Slip Fitter Mount (based on 45° angle)

Pole Description	85 MPH			90 MPH			100 MPH			110 MPH		
	# Area-70	# Area-110/145	# Area-220	# Area-70	# Area-110/145	# Area-220	# Area-70	# Area-110/145	# Area-220	# Area-70	# Area-110/145	# Area-220
With Double Tenon, Knuckle, 2 Area Lights												
POLESQS1A/20/11G/4IN/BZ	Y	Y	Y	Y	Y	Y	Y	Y	Y	Y	Y	N
POLESQS1A/25/11G/4IN/BZ	Y	Y	Y	Y	Y	N	N	N	N	N	N	N
POLESQS1A/30/11G/5IN/BZ	Y	Y	Y	Y	Y	Y	N	N	N	N	N	N
With Double Bullhorn, Knuckle, 2 Area Lights												
POLESQS1A/20/11G/4IN/BZ	Y	Y	Y	Y	Y	Y	Y	Y	Y	Y	Y	N
POLESQS1A/25/11G/4IN/BZ	Y	Y	Y	Y	Y	N	N	N	N	N	N	N
POLESQS1A/30/11G/5IN/BZ	Y	Y	Y	Y	Y	Y	Y	N	N	N	N	N
With Triple Bullhorn, Knuckle, 3 Area Lights												
POLESQS1A/20/11G/4IN/BZ	Y	Y	Y	Y	Y	Y	Y	Y	N	N	N	N
POLESQS1A/25/11G/4IN/BZ	Y	Y	N	N	N	N	N	N	N	N	N	N
POLESQS1A/30/11G/5IN/BZ	Y	Y	N	Y	Y	N	N	N	N	N	N	N

Wind Map

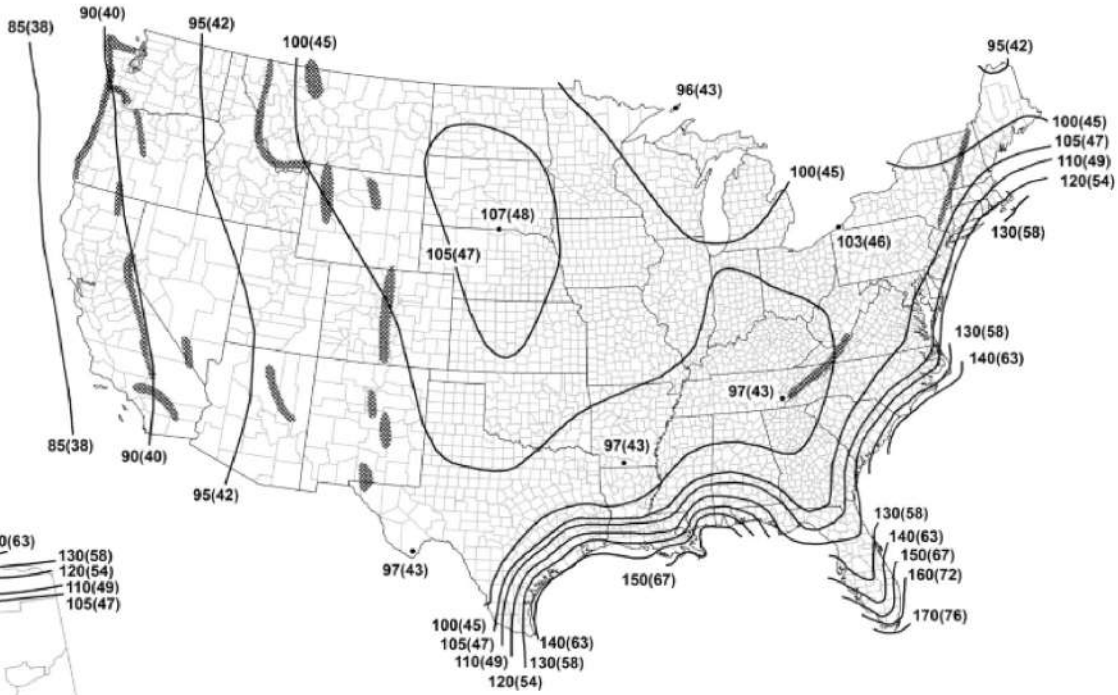

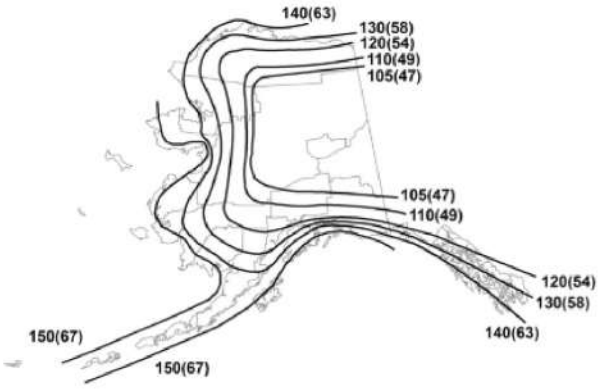

Location	V (mph)	V (m/s)
Guam	180	(80)
Virgin Islands	150	(67)
American Samoa	150	(67)
Hawaii	See Figure 26.5-2A	

Puerto Rico

Notes: Dark shading indicates a special wind region.

1. Values are nominal design 3-s gust wind speeds in miles per hour (m/s) at 33 ft. (10 m) above ground for Exposure Category C.
2. Linear interpolation is permitted between contours. Point values are provided to aid with interpolation.
3. Islands, coastal areas, and land boundaries outside the last contour shall use the last wind speed contour.
4. Mountainous terrain, gorges, ocean promontories, and special wind regions shall be examined for unusual wind conditions.
5. Wind speeds correspond to approximately a 15% probability of exceedance in 50 years. (Annual Exceedance Probability = 0.00333, MRI = 300 years).
6. Location-specific basic wind speeds shall be permitted to be determined using www.atcouncil.org/windspeed.

LEDVANCE LLC
200 Ballardvale Street
Wilmington, MA 01887 USA
Phone 1-800-LIGHTBULB (1-800-544-4828)
www.sylvania.com

SYLVANIA and LEDVANCE are registered trademarks.
All other trademarks are those of their respective owners.
Licensee of product trademark SYLVANIA in general lighting.
Specifications subject to change without notice.

/sylvania /sylvania

Name:
Email:
Phone:

© 2020 LEDVANCE LLC

SYLVANIA Luminaires

ValueLED™ Area Light

Item #	
Type	
Project	
Notes	
Date	

Application

The SYLVANIA ValueLED Area Light luminaires are the perfect alternative to traditional lighting technologies, offering a variety of solutions to illuminate parking lots, parking garage roofs and general area lighting.

Benefits and Features

- Integrated 7 pin photocontrol receptacle compatible with Standard NEMA photo cell or 5 pin and 7 pin controllers. Shorting cap included.
- DLC Premium listed to maximize rebate opportunities
- IP65 rated body offered in a modern and sleek design
- 5 different mounting options available
- Up to 130 LPW
- 4000K and 5000K color temperatures
- CRI >70
- Offered in 80, 100, 150, 200, 240, and 300 watts
- Type III, VI, V distribution offered
- Energy savings up to 73%

Electrical

- 120-277VAC AND 347-480VAC (please see Ordering Information for further details)
- Power Factor >90%
- THD <20%
- 0-10V dimmable
- Replaceable 10KV surge suppressor

Rated Life

- 150,000 hours (L_{70}) @25°C

Warranty

- 5-year

Ambient Operating Range

- -40°F to +113°F (-40°C to +45°C)

Certifications and Listings

- cULus listed to UL1598 standards, wet location and IP65 rated
- RoHS
- FCC
- DLC Premium
- MTO

Shown with yoke

Shown with slip fitter mount

Wattage Comparison

Traditional Source	Traditional System Wattage	LED System Wattage	Energy Savings
100W HPS	120	80	33%
100W MH	130	80	38%
150W HPS	170	80	53%
150W MH	188	80	57%
175W MH	210	80	62%
175W MH	210	100	52%
250W MH	290	100	66%
250W HPS	295	100	66%
250W MH	290	150	48%
250W HPS	295	150	49%
320W MH	370	150	59%
400W HPS	460	200	57%
400W MH	450	200	56%
750W HPS	820	240	71%
750W MH	840	240	71%
750W HPS	820	300	63%
750W MH	840	300	64%
1000W MH	1080	300	72%
1000W HPS	1100	300	73%

Installation

- Fixture mounting options include: pole mount, wall mount, trunnion mount, yoke mount, and slip fitter mount for 2-1/8" to 2-3/8" tenon
- Mounting accessories sold separately

Ordering Guide

AREAFLD	2A	/	XXX	XXX	D	7	XX	/	TX	/	BZ
Product Name AREAFLD = Area Floodlight Luminaire	Generation 2A = Generation 2A		Wattage 080 = 80 Watts 100 = 100 Watts 150 = 150 Watts 200 = 200 Watts 240 = 240 Watts 300 = 300 Watts	Voltage UNV = 120-277V HUV = 347-480V	Dimming D = 0-10V Dimming	CRI CRI = > 70	Color Temp 40 = 4000K 50 = 5000K		Distribution T3 = Type III T4 = Type IV T5 = Type V		Color / Finish BZ = Bronze

Ordering Information

Item Number	Ordering Abbreviation	Wattage (W)	Input Voltage (V)	Dimming	CRI	Color Temperature (CCT)	Distribution	Total Fixture Lumens	LPW	DLC	MTO*
65248	AREAFLD2A/080UNVD740/T3/BZ	80	120-277	0-10V	>70	4000K	Type III	10,400	130	Prm	–
65249	AREAFLD2A/080UNVD740/T4/BZ	80	120-277	0-10V	>70	4000K	Type VI	10,400	130	Prm	–
65250	AREAFLD2A/080UNVD740/T5/BZ	80	120-277	0-10V	>70	4000K	Type V	10,400	130	Prm	–
65251	AREAFLD2A/080UNVD750/T3/BZ	80	120-277	0-10V	>70	5000K	Type III	10,400	130	Prm	–
65252	AREAFLD2A/080UNVD750/T4/BZ	80	120-277	0-10V	>70	5000K	Type VI	10,400	130	Prm	–
65253	AREAFLD2A/080UNVD750/T5/BZ	80	120-277	0-10V	>70	5000K	Type V	10,400	130	Prm	–
65290	AREAFLD2A/100UNVD740/T3/BZ	100	120-277	0-10V	>70	4000K	Type III	13,000	130	Prm	–
65291	AREAFLD2A/100UNVD740/T4/BZ	100	120-277	0-10V	>70	4000K	Type VI	13,000	130	Prm	–
65292	AREAFLD2A/100UNVD740/T5/BZ	100	120-277	0-10V	>70	4000K	Type V	13,000	130	Prm	–
65293	AREAFLD2A/100UNVD750/T3/BZ	100	120-277	0-10V	>70	5000K	Type III	13,000	130	Prm	–
65294	AREAFLD2A/100UNVD750T4//BZ	100	120-277	0-10V	>70	5000K	Type VI	13,000	130	Prm	–
65295	AREAFLD2A/100UNVD750T5//BZ	100	120-277	0-10V	>70	5000K	Type V	13,000	130	Prm	–
61752	AREAFLD2A/100HUVD740/T3/BZ	100	347-480	0-10V	>70	4000K	Type III	13,000	130	Prm	MTO
61753	AREAFLD2A/100HUVD740/T4/BZ	100	347-480	0-10V	>70	4000K	Type VI	13,000	130	Prm	MTO
61754	AREAFLD2A/100HUVD740/T5/BZ	100	347-480	0-10V	>70	4000K	Type V	13,000	130	Prm	MTO
61755	AREAFLD2A/100HUVD750/T3/BZ	100	347-480	0-10V	>70	5000K	Type III	13,000	130	Prm	MTO
61756	AREAFLD2A/100HUVD750/T4/BZ	100	347-480	0-10V	>70	5000K	Type VI	13,000	130	Prm	MTO
61757	AREAFLD2A/100HUVD750/T5/BZ	100	347-480	0-10V	>70	5000K	Type V	13,000	130	Prm	MTO
61758	AREAFLD2A/150UNVD740/T3/BZ	150	120-277	0-10V	>70	4000K	Type III	19,000	127	Prm	–
61759	AREAFLD2A/150UNVD740/T4/BZ	150	120-277	0-10V	>70	4000K	Type VI	19,000	127	Prm	–
61760	AREAFLD2A/150UNVD740/T5/BZ	150	120-277	0-10V	>70	4000K	Type V	19,000	127	Prm	–
61761	AREAFLD2A150UNVD750/T3/BZ	150	120-277	0-10V	>70	5000K	Type III	19,000	127	Prm	–
61762	AREAFLD2A/150UNVD750/T4/BZ	150	120-277	0-10V	>70	5000K	Type VI	19,000	127	Prm	–
61763	AREAFLD2A/150UNVD750/T5/BZ	150	120-277	0-10V	>70	5000K	Type V	19,000	127	Prm	–
65284	AREAFLD2A/150HUVD740/T3/BZ	150	347-480	0-10V	>70	4000K	Type III	19,000	127	Prm	MTO
65285	AREAFLD2A/150HUVD740/T4/BZ	150	347-480	0-10V	>70	4000K	Type VI	19,000	127	Prm	MTO
65286	AREAFLD2A/150HUVD740/T5/BZ	150	347-480	0-10V	>70	4000K	Type V	19,000	127	Prm	MTO
65287	AREAFLD2A/150HUVD750/T3/BZ	150	347-480	0-10V	>70	5000K	Type III	19,000	127	Prm	MTO
65288	AREAFLD2A/150HUVD750/T4/BZ	150	347-480	0-10V	>70	5000K	Type VI	19,000	127	Prm	MTO
65289	AREAFLD2A/150HUVD750/T5/BZ	150	347-480	0-10V	>70	5000K	Type V	19,000	127	Prm	MTO
65296	AREAFLD2A/200UNVD740/T3/BZ	200	120-277	0-10V	>70	4000K	Type III	25,000	125	Prm	–
65297	AREAFLD2A/200UNVD740/T4/BZ	200	120-277	0-10V	>70	4000K	Type VI	25,000	125	Prm	–
65298	AREAFLD2A/200UNVD740/T5/BZ	200	120-277	0-10V	>70	4000K	Type V	25,000	125	Prm	–
65299	AREAFLD2A/200UNVD750/T3/BZ	200	120-277	0-10V	>70	5000K	Type III	25,000	125	Prm	–
65300	AREAFLD2A/200UNVD750/T4/BZ	200	120-277	0-10V	>70	5000K	Type VI	25,000	125	Prm	–
65301	AREAFLD2A/200UNVD750/T5/BZ	200	120-277	0-10V	>70	5000K	Type V	25,000	125	Prm	–
61738	AREAFLD2A/200HUVD740/T3/BZ	200	347-480	0-10V	>70	4000K	Type III	25,000	125	Prm	MTO
61739	AREAFLD2A/200HUVD740/T4/BZ	200	347-480	0-10V	>70	4000K	Type VI	25,000	125	Prm	MTO
61740	AREAFLD2A/200HUVD740/T5/BZ	200	347-480	0-10V	>70	4000K	Type V	25,000	125	Prm	MTO
61741	AREAFLD2A/200HUVD750/T3/BZ	200	347-480	0-10V	>70	5000K	Type III	25,000	125	Prm	MTO
61742	AREAFLD2A/200HUVD750/T4/BZ	200	347-480	0-10V	>70	5000K	Type VI	25,000	125	Prm	MTO
61743	AREAFLD2A/200HUVD750/T5/BZ	200	347-480	0-10V	>70	5000K	Type V	25,000	125	Prm	MTO
65260	AREAFLD2A/240UNVD740/T3/BZ	240	120-277	0-10V	>70	4000K	Type III	31,000	129	Prm	–
65261	AREAFLD2A/240UNVD740/T4/BZ	240	120-277	0-10V	>70	4000K	Type VI	31,000	129	Prm	–
65262	AREAFLD2A/240UNVD740/T5/BZ	240	120-277	0-10V	>70	4000K	Type V	31,000	129	Prm	–
65263	AREAFLD2A/240UNVD750/T3/BZ	240	120-277	0-10V	>70	5000K	Type III	31,000	129	Prm	–
65264	AREAFLD2A/240UNVD750/T4/BZ	240	120-277	0-10V	>70	5000K	Type VI	31,000	129	Prm	–
65265	AREAFLD2A/240UNVD750/T5/BZ	240	120-277	0-10V	>70	5000K	Type V	31,000	129	Prm	–
65254	AREAFLD2A/240HUVD740/T3/BZ	240	347-480	0-10V	>70	4000K	Type III	31,000	129	Prm	MTO
65255	AREAFLD2A/240HUVD740/T4/BZ	240	347-480	0-10V	>70	4000K	Type VI	31,000	129	Prm	MTO
65256	AREAFLD2A/240HUVD740/T5/BZ	240	347-480	0-10V	>70	4000K	Type V	31,000	129	Prm	MTO
65257	AREAFLD2A/240HUVD750/T3/BZ	240	347-480	0-10V	>70	5000K	Type III	31,000	129	Prm	MTO
65258	AREAFLD2A/240HUVD750/T4/BZ	240	347-480	0-10V	>70	5000K	Type VI	31,000	129	Prm	MTO
65259	AREAFLD2A/240HUVD750/T5/BZ	240	347-480	0-10V	>70	5000K	Type V	31,000	129	Prm	MTO
65278	AREAFLD2A/300UNVD740/T3/BZ	300	120-277	0-10V	>70	4000K	Type III	39,000	130	Prm	–
65279	AREAFLD2A/300UNVD740/T4/BZ	300	120-277	0-10V	>70	4000K	Type VI	39,000	130	Prm	–
65280	AREAFLD2A/300UNVD740/T5/BZ	300	120-277	0-10V	>70	4000K	Type V	39,000	130	Prm	–
65281	AREAFLD2A/300UNVD750/T3/BZ	300	120-277	0-10V	>70	5000K	Type III	39,000	130	Prm	–
65282	AREAFLD2A//300UNVD750/T4/BZ	300	120-277	0-10V	>70	5000K	Type VI	39,000	130	Prm	–
65283	AREAFLD2A/300UNVD750/T5/BZ	300	120-277	0-10V	>70	5000K	Type V	39,000	130	Prm	–
65272	AREAFLD2A/300HUVD740/T3/BZ	300	347-480	0-10V	>70	4000K	Type III	39,000	130	Prm	MTO
65273	AREAFLD2A/300HUVD740/T4/BZ	300	347-480	0-10V	>70	4000K	Type VI	39,000	130	Prm	MTO
65274	AREAFLD2A/300HUVD740/T5/BZ	300	347-480	0-10V	>70	4000K	Type V	39,000	130	Prm	MTO
65275	AREAFLD2A/300HUVD750/T3/BZ	300	347-480	0-10V	>70	5000K	Type III	39,000	130	Prm	MTO
65276	AREAFLD2A/300HUVD750/T4/BZ	300	347-480	0-10V	>70	5000K	Type VI	39,000	130	Prm	MTO
65277	AREAFLD2A/300HUVD750/T5/BZ	300	347-480	0-10V	>70	5000K	Type V	39,000	130	Prm	MTO

*Made To Order

Photometric Information

Mounting height = 20 ft
Mounting angle = 45° (where indicated)

AREAFLD2A-80W-T3

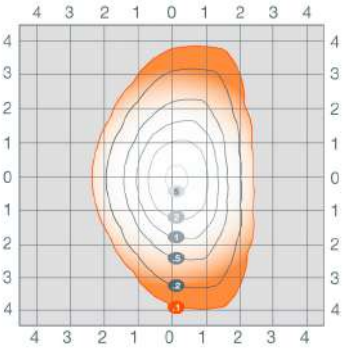

AREAFLD2A-80W-T3 at 45° tilt

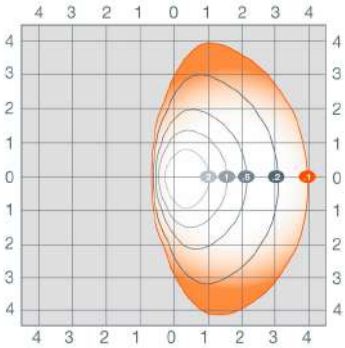

AREAFLD2A-80W-T4

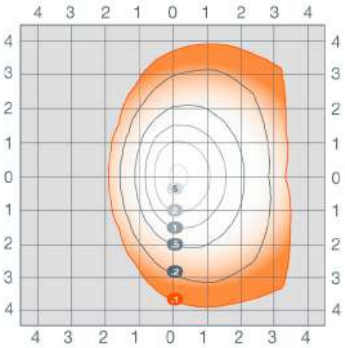

AREAFLD2A-80W-T4 at 45° tilt

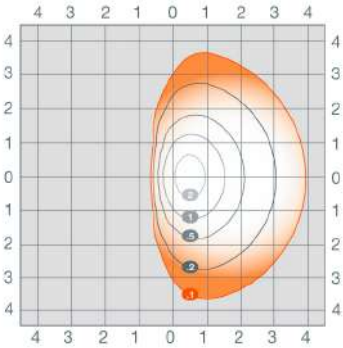

AREAFLD2A-80W-T5

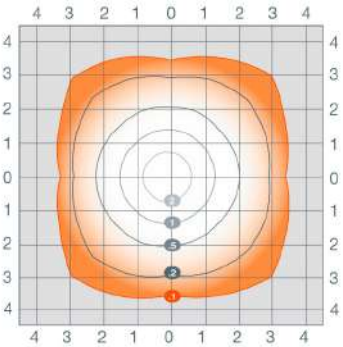

AREAFLD2A-80W-T5 at 45° tilt

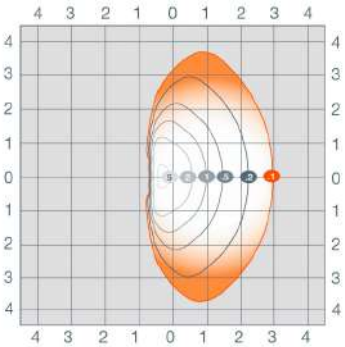

AREAFLD2A-100W-T3

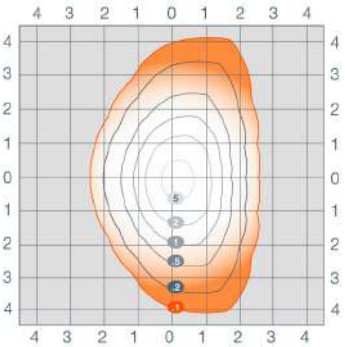

AREAFLD2A-100W-T3 at 45° tilt

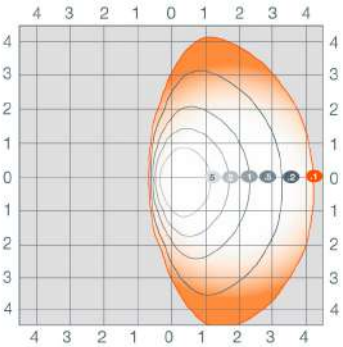

AREAFLD2A-100W-T4

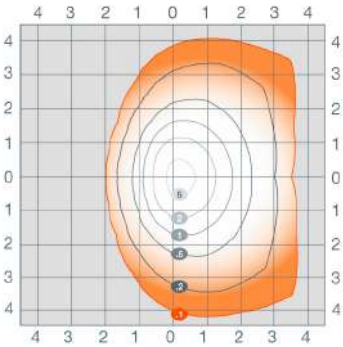

AREAFLD2A-100W-T4 at 45° tilt

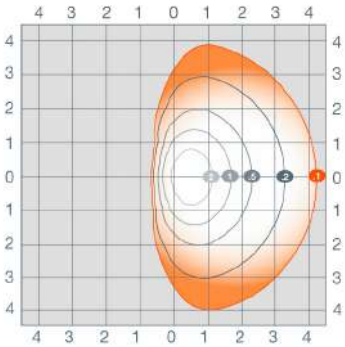

AREAFLD2A-100W-T5

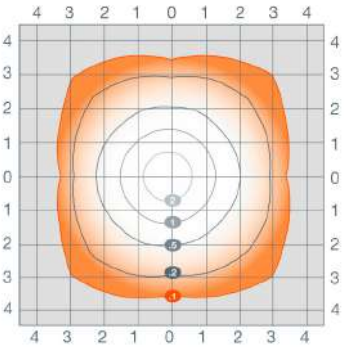

AREAFLD2A-100W-T5 at 45° tilt

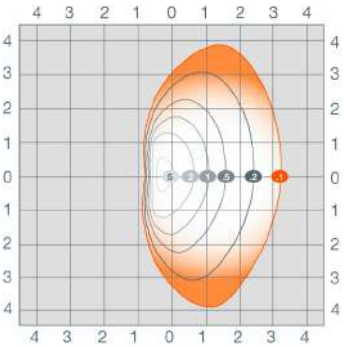

AREAFLD2A-150W-T3

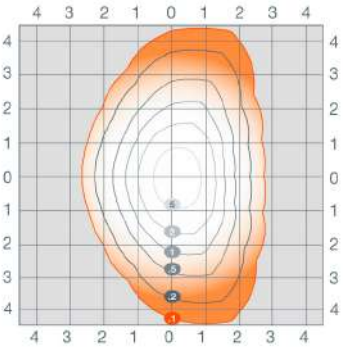

AREAFLD2A-150W-T3 at 45° tilt

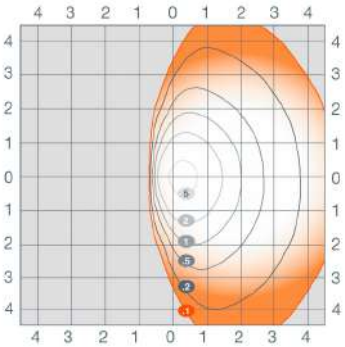

AREAFLD2A-150W-T4

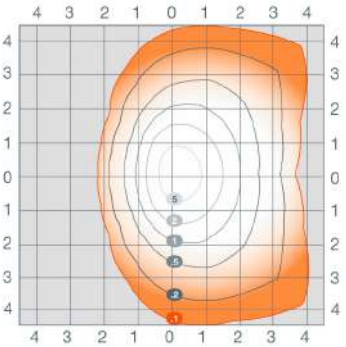

AREAFLD2A-150W-T4 at 45° tilt

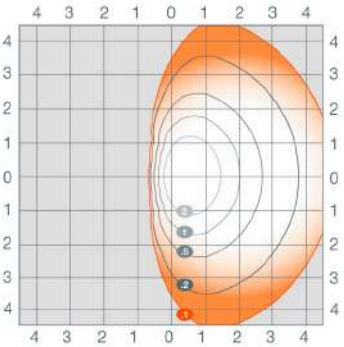

Photometric Information (continued)

Mounting height = 20 ft
Mounting angle = 45° (where indicated)

AREAFLD2A-150W-T5

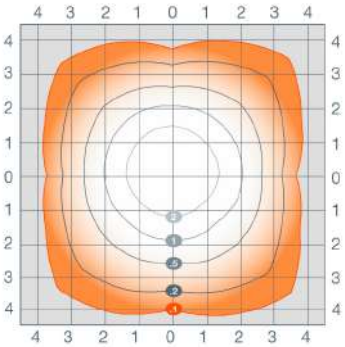

AREAFLD2A-150W-T5 at 45° tilt

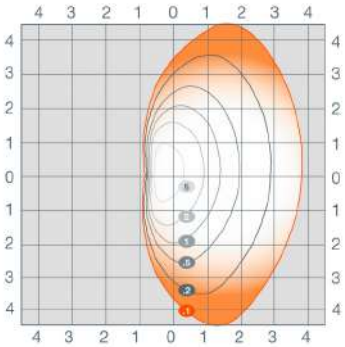

AREAFLD2A-200W-T3

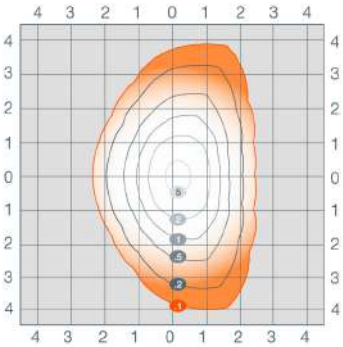

AREAFLD2A-200W-T3 at 45° tilt

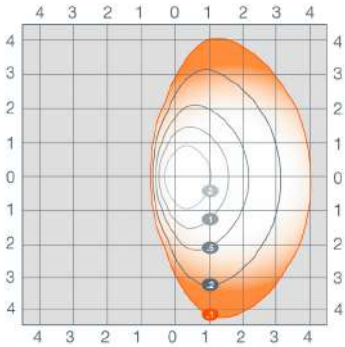

AREAFLD2A-200W-T4

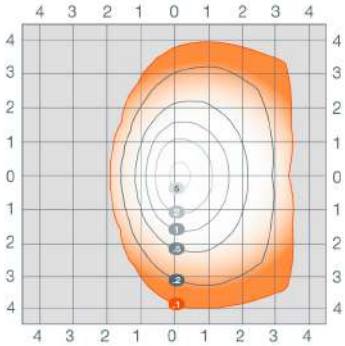

AREAFLD2A-200W-T4 at 45° tilt

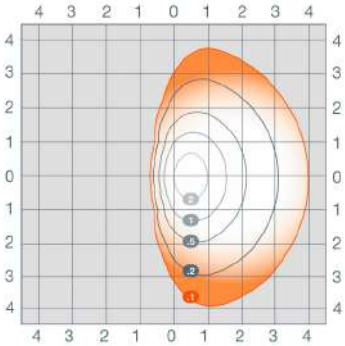

AREAFLD2A-200W-T5

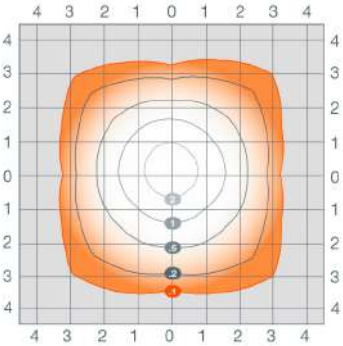

AREAFLD2A-200W-T5 at 45° tilt

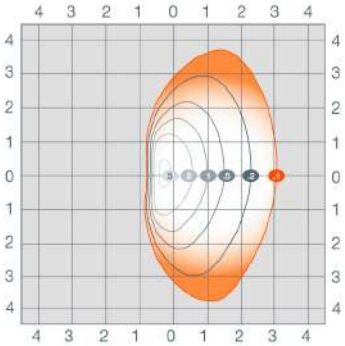

AREAFLD2A-240W-T3

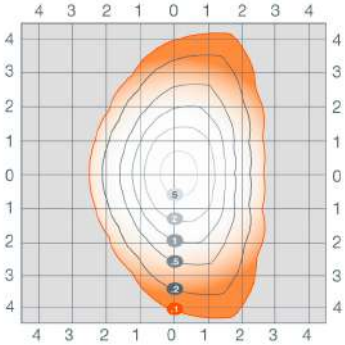

AREAFLD2A-240W-T3 at 45° tilt

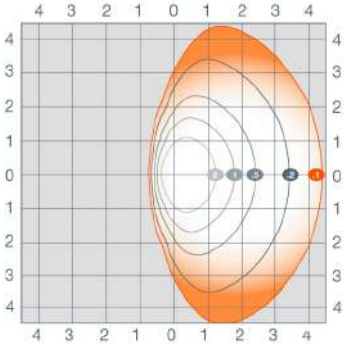

AREAFLD2A-240W-T4

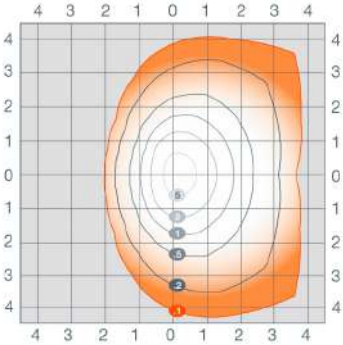

AREAFLD2A-240W-T4 at 45° tilt

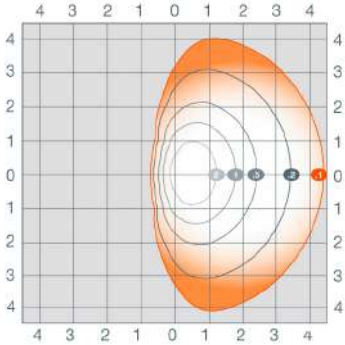

AREAFLD2A-240W-T5

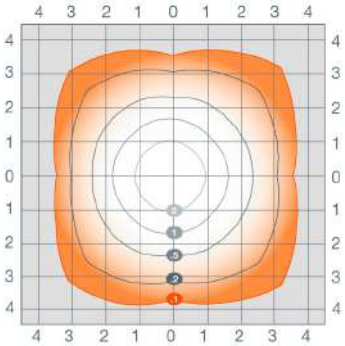

AREAFLD2A-240W-T5 at 45° tilt

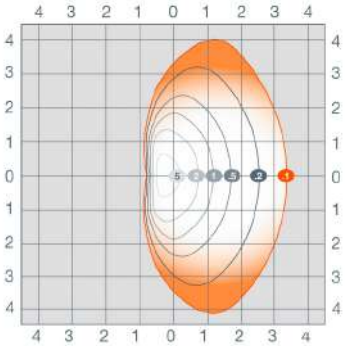

AREAFLD2A-300W-T3

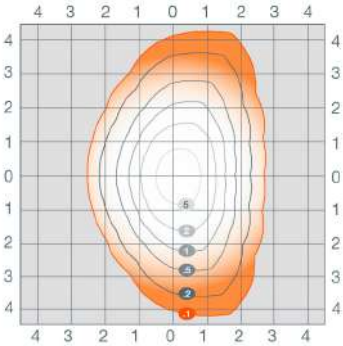

AREAFLD2A-300W-T3 at 45° tilt

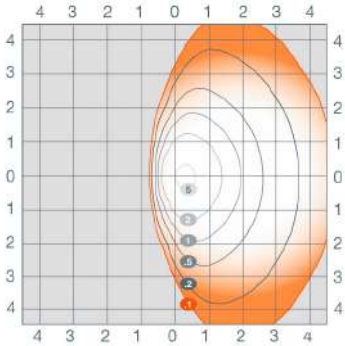

Photometric Information (continued)

Mounting height = 20 ft
Mounting angle = 45° (where indicated)

AREAFLD2A-300W-T4

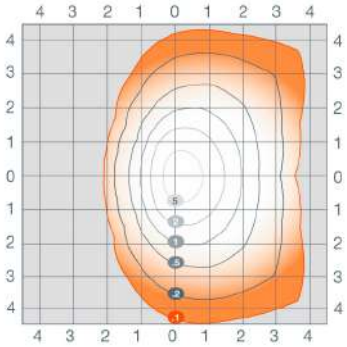

AREAFLD2A-300W-T4 at 45° tilt

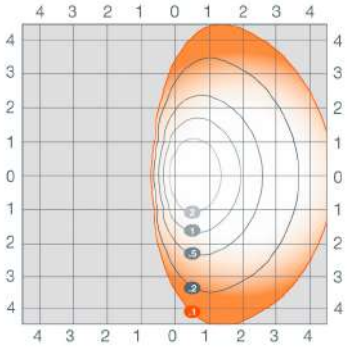

AREAFLD2A-300W-T5

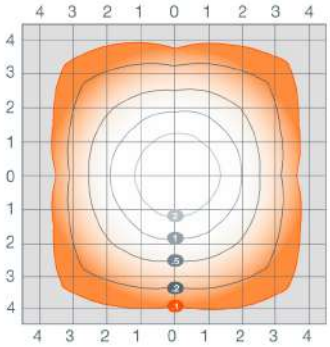

AREAFLD2A-300W-T5 at 45° tilt

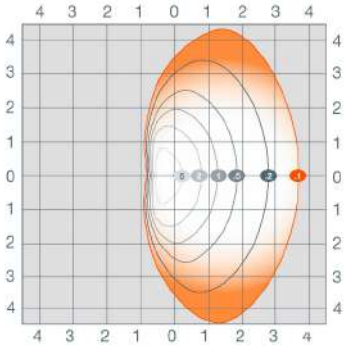

Physical Information

Luminaire Description	Length	Width	Height	EPA (no knuckle, pole mount)	EPA (with knuckle mounted at 45° (slipfitter))
Area Light 80-150W	15.3" (388mm)	13.5" (342mm)	4.3" (109mm)	0.35ft^2	1.14ft^2
Area Light 200-300W	21.4" (543mm)	13.5" (342mm)	4.5" (115mm)	0.52ft^2	1.62ft^2

80-150W

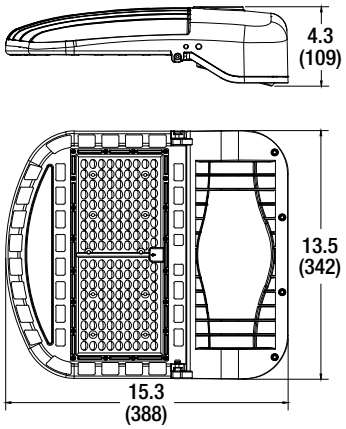

200-300W

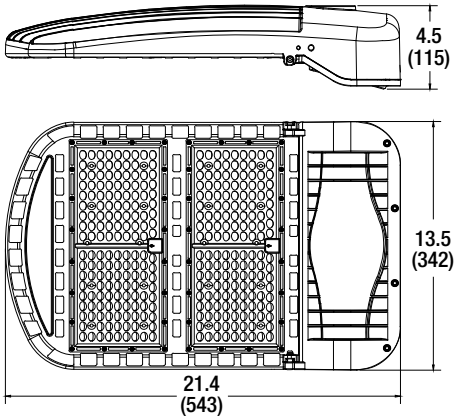

Dimensions in inches (mm)

Accessories

Item Number	Ordering Abbreviation	Item Description
61875	AREAFLD2A/WALLMOUNT/BZ	Wall Mount, Bronze
61876	AREAFLD2A/POLEMOUNT/BZ	Pole Mount, Bronze
61877	AREAFLD2A/SLIPFITTER/BZ	Slip Fitter Mount, Bronze
61878	AREAFLD2A/TRUNNION/BZ	Trunnion Mount, Bronze
61879	AREAFLD2A/YOKEMOUNT/BZ	Yoke Mount, Bronze

AREAFLD2A/WALLMOUNT/BZ

AREAFLD2A/POLEMOUNT/BZ

AREAFLD2A/SLIPFITTER/BZ

AREAFLD2A/TRUNNION/BZ

AREAFLD2A/YOKEMOUNT/BZ

Poles

Product Features

- Poles available in three heights: 20', 25', and 30'
- 20' and 25' poles are 4" square; 30' pole is 5" square
- Offered in 11 gauge
- Fabricated from the highest grade structural steel

Specifications

- Square steel pole with powder coat paint. The standard color is bronze
- Polycarbonate spring loaded top cover
- Pre-drilled mounting holes on all 4 sides with Polycarbonate grommets
- Reinforced 3" x 6" cast iron hand-hole with ground screw included
- Easily secured base cover included
- Bolt circle template included

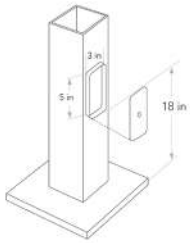

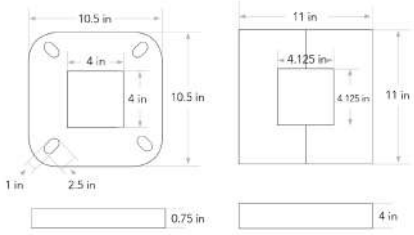

4x4 Anchor Base Included

Base Plate Cover Included Packaged Separately

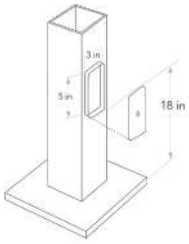

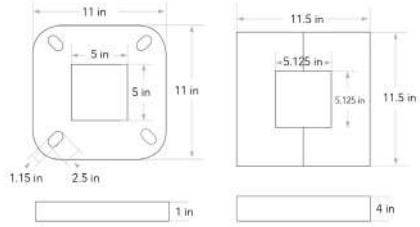

5x5 Anchor Base Included

Base Plate Cover Included Packaged Separately

Ordering Guide

POLESQS	1A	/	XX	/	XXG	/	XXIN	/	BZ
Product Name	Generation		Height		Gauge		Size		Finish
POLESQS =	1A		20 = 20 feet		11G = 11		04IN = 4 inches		Bronze
Square Straight Pole			25 = 25 feet				05IN = 5 inches		
			30 = 30 feet						

Ordering Information (Poles)

Item Number	Ordering Abbreviation	Shape	Height (ft)	Gauge (in)	Size (in)	Finish
60659	POLESQS1A/20/11G/4IN/BZ	SquareStraight	20	11	4	Bronze
60661	POLESQS1A/25/11G/4IN/BZ	SquareStraight	25	11	4	Bronze
60663	POLESQS1A/30/11G/5IN/BZ	SquareStraight	30	11	5	Bronze
60664	POLESQS1A/30/07G/5IN/BZ	SquareStraight	30	7	5	Bronze

Ordering Information (Accessories)

Item Number	Ordering Abbreviation	Description	Compatibility
60665	POLESQS1A/ANJBOLTKIT/304	3/4" x 30" Anchor Bolt Kit (set of 4 bolts)	For use with 60659 and 60661
60666	POLESQS1A/ANJBOLTKIT/364	1" x 36" Anchor Bolt Kit (set of 4 bolts)	For use with 60663
60667	POLESQS1A/TENON/4IN/BZ	4" Tenon Mount, Bronze Finish	For use with 60659 and 60661
60668	POLESQS1A/TENON/5IN/BZ	5" Tenon Mount, Bronze Finish	For use with 60663
65013*	POLESQS1A/DBLTENON/4IN/BZ	4" Double Tenon Bracket, Bronze Finish	For use with 60659 and 60661
65014*	POLESQS1A/DBLTENON/5IN/BZ	5" Double Tenon Bracket, Bronze Finish	For use with 60663
65015	POLESQS1A/DBLBULHORN/4IN/BZ	4" Double Bullhorn Bracket, Bronze Finish	For use with 60659 and 60661
65016	POLESQS1A/DBLBULHORN/5IN/BZ	5" Double Bullhorn Bracket, Bronze Finish	For use with 60663
60845	POLESQS1A/TPLBULHORN/4IN/BZ	4" Triple Bullhorn Bracket, Bronze Finish	For use with 60659 and 60661
60846	POLESQS1A/TPLBULHORN/5IN/BZ	5" Triple Bullhorn Bracket, Bronze Finish	For use with 60663
65112	POLESQS1A/QUADTENON/4IN/BZ	4" Quad Tenon Bracket, Bronze Finish	For use with 60659 and 60661
65113	POLESQS1A/QUADTENON/5IN/BZ	5" Quad Tenon Bracket, Bronze Finish	For use with 60663

For further information and to learn more about utility rebates, contact your local SYLVANIA sales representative.
*These mounting accessories require 60667 or 60668 for proper installation.

NAED 60665 – 3/4" x 30"

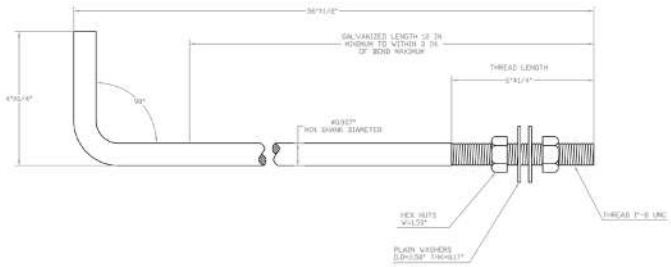

NAED 60666 – 1" x 36"

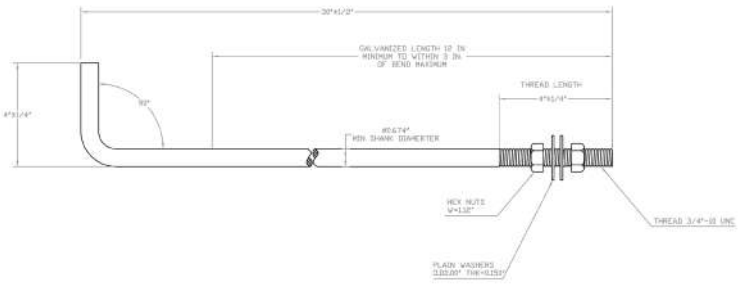

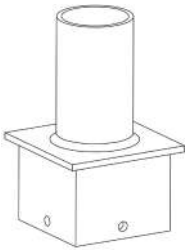

Tenon

NAED 60667 – 4 inch
NAED 60668 – 5 inch

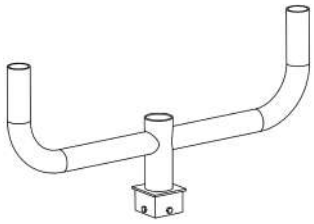

Double Bullhorn

NAED 65015 – 4 inch
NAED 65016 – 5 inch

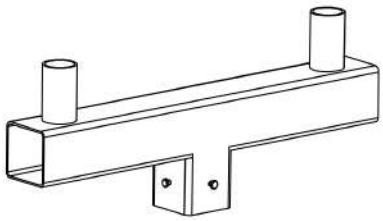

Double Tenon

NAED 65013 – 4 inch
NAED 65014 – 5 inch

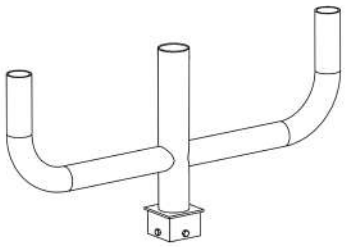

Triple Bullhorn

NAED 60845 – 4 inch
NAED 60846 – 5 inch

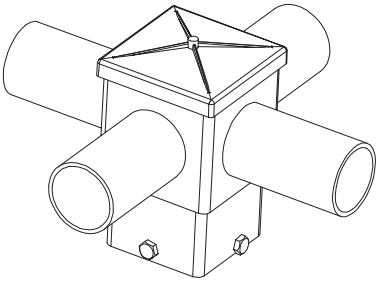

Quad Tenon

NAED 65112 – 4 inch
NAED 65113 – 5 inch

Maximum EPA Loading per Pole

Ordering Abbreviation	85 MPH	90 MPH	100 MPH	110 MPH	120 MPH	130 MPH	140 MPH
POLE1A/SQ/20/11	10.4	8.7	6	4	2.6	1.4	0.5
POLE1A/SQ/25/11	5	3.8	1.8	0.4	–	–	–
POLE1A/SQ/30/11	7	5.4	3	1.3	0.2	–	–

Fixture Pole Loading – Pole Mount

Pole Description	100 MPH		110 MPH		120 MPH		130 MPH		140 MPH	
	Area 80-150W	Area 200-300W	Area 80-150W	Area 200-300W	Area 80-150W	Area 200-300W	Area 80-150W	Area 200-300W	Area 80-150W	Area 200-300W
POLESQS1A/20/11G/4IN/BZ	17	11	11	7	7	5	4	4	1	2
POLESQS1A/25/11G/4IN/BZ	5	3	1	0	0	0	0	0	0	0
POLESQS1A/30/11G/4IN/BZ	8	5	3	2	0	2	0	0	0	0

Fixture Pole Loading – Slip Fitter Mount (based on 45° angle)

Pole Description	85 MPH		90 MPH		100 MPH		110 MPH	
	Area 80-150W	Area 200-300W	Area 80-150W	Area 200-300W	Area 80-150W	Area 200-300W	Area 80-150W	Area 200-300W
With Double Tenon, Knuckle, 2 Area Lights								
POLESQS1A/20/11G/4IN/BZ	Y	Y	Y	Y	Y	Y	Y	Y
POLESQS1A/25/11G/4IN/BZ	Y	Y	Y	N	N	N	N	N
POLESQS1A/30/11G/5IN/BZ	Y	Y	Y	Y	N	N	N	N
With Double Bullhorn, Knuckle, 2 Area Lights								
POLESQS1A/20/11G/4IN/BZ	Y	Y	Y	Y	Y	Y	Y	N
POLESQS1A/25/11G/4IN/BZ	Y	Y	Y	N	N	N	N	N
POLESQS1A/30/11G/5IN/BZ	Y	Y	Y	Y	N	N	N	N
With Triple Bullhorn, Knuckle, 3 Area Lights								
POLESQS1A/20/11G/4IN/BZ	Y	Y	Y	Y	Y	N	N	N
POLESQS1A/25/11G/4IN/BZ	Y	N	N	N	N	N	N	N
POLESQS1A/30/11G/5IN/BZ	Y	Y	Y	N	N	N	N	N

Wind Map

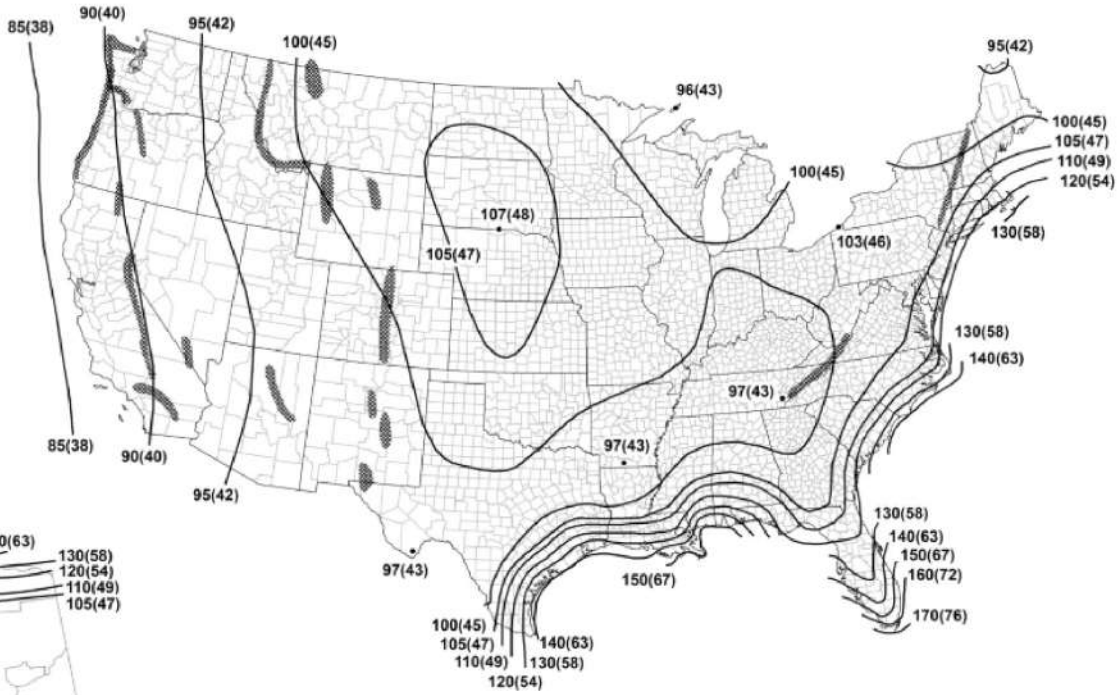

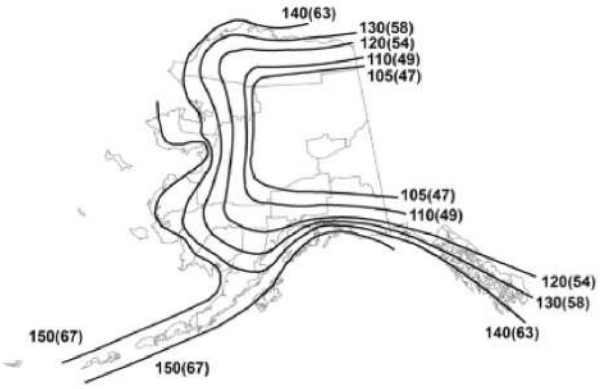

Location	V (mph)	V (m/s)
Guam	180	(80)
Virgin Islands	150	(67)
American Samoa	150	(67)
Hawaii	See Figure 26.5-2A	

Puerto Rico

Notes: Dark shading indicates a special wind region.

1. Values are nominal design 3-s gust wind speeds in miles per hour (m/s) at 33 ft. (10 m) above ground for Exposure Category C.
2. Linear interpolation is permitted between contours. Point values are provided to aid with interpolation.
3. Islands, coastal areas, and land boundaries outside the last contour shall use the last wind speed contour.
4. Mountainous terrain, gorges, ocean promontories, and special wind regions shall be examined for unusual wind conditions.
5. Wind speeds correspond to approximately a 15% probability of exceedance in 50 years. (Annual Exceedance Probability = 0.00333, MRI = 300 years).
6. Location-specific basic wind speeds shall be permitted to be determined using www.atcouncil.org/windspeed.

LEDVANCE LLC
200 Ballardvale Street
Wilmington, MA 01887 USA
Phone 1-800-LIGHTBULB (1-800-544-4828)
www.sylvania.com

Name:
Email:
Phone:

SYLVANIA and LEDVANCE are registered trademarks.
All other trademarks are those of their respective owners.
Licensee of product trademark SYLVANIA in general lighting.
Specifications subject to change without notice.

/sylvania /sylvania

© 2020 LEDVANCE LLC

SYLVANIA Luminaires

Dusk to Dawn

Catalog #	Type
Project	
Notes	
Date	
Prepared by	

Dimensions

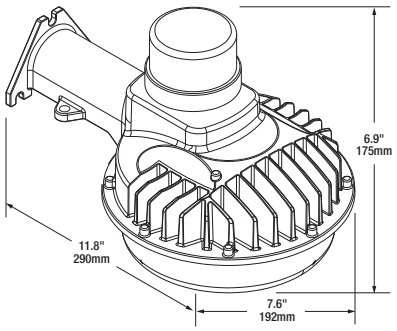

Product Features

- Traditional, compact, lightweight design
- Easy to install
- Energy savings up to 79%
- Included NEMA photosensor included for additional energy savings
- Applications: general area lighting, yards, docks, barns, service roads, security lighting

Wattage Comparison Chart

Dusk to Dawn Traditional Source	Traditional System Wattage	LED System Wattage	Energy Savings
35W HPS	42	20	52%
50W HPS	62	20	68%
70W HPS	91	20	78%
70W HPS	91	40	56%
100W HPS	120	40	67%
100W MH	130	40	69%
150W HPS	170	40	76%
150W MH	188	40	79%

Specifications

Weight: 2.8 lbs (1.3 kg)

Construction: Cast aluminum alloy housing with UV stabilized powder coat paint finish and UV stabilized polycarbonate lens. The standard color is grey.

LED System: LED system with a life rating of ≥135,000 hours at L_{70} @25°C. Luminaire efficacy up to 126 LPW.

Electrical: Offered in 20 and 40 Watts, the luminaire is designed to operate through the 120-277 VAC voltage. The LED driver has a 4kV surge suppression and is a constant current device, meeting UL1310 and UL48 Class 1 with built-in over temperature protection. The power factor is ≥90% and THD is ≤20%.

Color Characteristics: CRI>80; CCT of 4000K or 5000K.

Optics: Type V distribution with diffuse UV stabilized polycarbonate lens.

Installation: Wall or pole mounted; additional mounting arm extension available.

Operating Temperature: -40°F to +104°F (-40°C to +40°C).

Listings: cULus listed to UL1598 standards for wet locations.

Warranty: Standard 5-year luminaire warranty (LEDLUM001).

Note: Specifications subject to change without notice. IES files available online.

Ordering Guide

Item Number:

AREADTD	1A	/	XXX	UNV	8	XX	/	NC	/	GR
Product Name AREADTD	Generation 1A		Wattage 020 = 20 Watts 040 = 40 Watts	Voltage UNV = 120-277V	CRI 8 ≥80	Color Temp (CCT) 40 = 4000K 50 = 5000K		Distribution NC = Non-Cutoff		Color/Finish GR = Grey

Photometric Data

AREADTD1A/040UNV840/NC/GR

Isofootcandle Lines at 15' Mounting Height

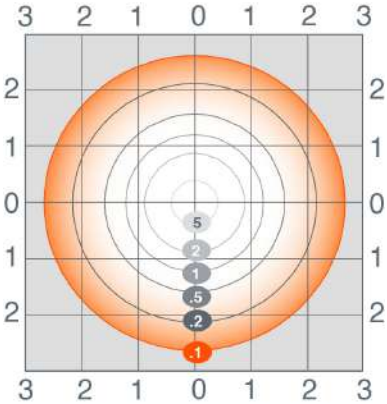

Ordering Information

Item Number	Ordering Abbreviation	Power (W)	Input Voltage	Dimming	CRI	Color Temp (CCT)	BUG Rating	Total Fixture Lumens	LPW*	DLC**
60238	AREADTD1A/020UNV840/NC/GR	20	120-277	0-10V	>80	4000K	B1-U1-G1	2300	123	Prm
60239	AREADTD1A/020UNV850/NC/GR	20	120-277	0-10V	>80	5000K	B1-U1-G1	2300	123	Prm
60110	AREADTD1A/040UNV840/NC/GR	40	120-277	0-10V	>80	4000K	B2-U2-G1	4600	126	Prm
60111	AREADTD1A/040UNV850/NC/GR	40	120-277	0-10V	>80	5000K	B2-U2-G1	4600	126	Prm

*LPW per LM79 report.
**Prm is for DLC Premium.

Accessories and Replacement Parts

Item Number	Ordering Abbreviation	Item Description
60127	AREADTD1A/ARM/24	Mounting Arm

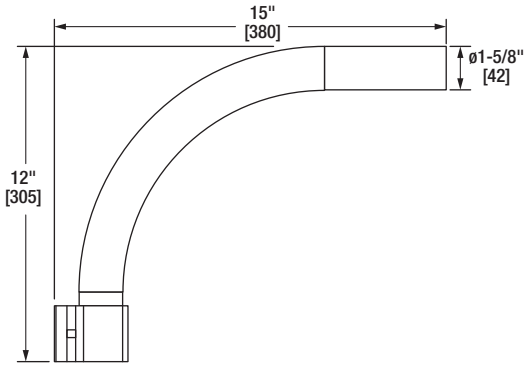

LEDVANCE LLC
200 Ballardvale Street
Wilmington, MA 01887 USA
Phone 1-800-LIGHTBULB (1-800-544-4828)
www.sylvania.com

SYLVANIA and LEDVANCE are registered trademarks.
All other trademarks are those of their respective owners.
Licensee of product trademark SYLVANIA in general lighting.
Specifications subject to change without notice.

/sylvania /sylvania

© 2020 LEDVANCE LLC

SYLVANIA Luminaires

Slim Floodlight

Item #	
Type	
Project	
Notes	
Date	

Application

The Slim Floodlight luminaires are lightweight, compact and designed for landscape, flood and signage applications.

Benefits and Features

- Lightweight, compact design with multiple mounting options
- IP66 rated with wide flood distribution
- Up to 123 LPW
- 3000K, 4000K, and 5000K color temperature
- CRI 80+
- Offered in 20, 30, 50, and 100 watts
- Energy savings up to 87%

Electrical

- 120-277 VAC
- Power factor ≥90%
- THD ≤20%
- Constant current LED driver with 4kV surge suppression

Rated Life

- ≥150,000 hours (L_{70})

Warranty

- Standard 5-year luminaire warranty (LEDLUM001)

Ambient Operating Range

- -40°F to +104°F (-40°C to +40°C)

Certifications and Listings

- cULus listed to UL1598 standards for wet locations and IP66 rated
- Driver meets UL1310 and UL48 Class I

Wattage Comparison

Traditional Source	Traditional System Wattage	LED System Wattage	Energy Savings
35W HPS	42	20	52%
50W HPS	62	20	68%
70W MH	91	20	78%
150W Q Halogen	150	20	87%
50W HPS	62	30	52%
70W HPS	91	30	67%
100W HPS	120	30	67%
100W MH	130	30	69%
200W Q Halogen	200	30	85%
150W HPS	170	50	71%
150W MH	188	50	73%
175W MH	210	50	76%
175W MH	210	100	52%
250W MH	290	100	66%
250W HPS	295	100	66%

Installation

Slim Floodlight 20-50W luminaires can be knuckle mounted with included 1/2" NPS for mounting to junction box. All models are also available with a trunnion mount (please see Ordering Information).

c UL us LISTED

RoHS compliant

*See page 2 for DLC listings.

SYLVANIA

Ordering Guide

SLMFLD	1A	/	XXX	UNV	8	XX	/	WF	/	XX	/	BZ	/	X
Product Name SLMFLD	Generation 1A		Wattage 020 = 20W 030 = 30W 050 = 50W 100 = 100W	Voltage UNV = 120-277V	CRI 8 = >80	Color Temp (CCT) 30 = 3000K* 40 = 4000K 50 = 5000K		Optics WF = Wide Flood		Mounting TR = Trunnion** Blank = Default mounting		Color/Finish BZ = Bronze		Options Blank = No Option D = Motion/Daylight Sensor

*3000K only available in 20W version.
**Default Mounting on 20-50W is Knuckle (Blank). Default Mounting on 100W is Trunnion (Blank).

Ordering Information

Item Number	Ordering Abbreviation	Power (W)	Input Voltage	CRI	Color Temp (CCT)	Distribution	Total Fixture Lumens	LPW*	Mounting	DLC**	Options
74906	SLMFLD1A/020UNV830/WF/BZ	20	120-277V	>80	3000K	Wide Flood	2000	103	Knuckle	Std	–
74907	SLMFLD1A/020UNV840/WF/BZ	20	120-277V	>80	4000K	Wide Flood	2200	111	Knuckle	Prm	–
60200	SLMFLD1A/020UNV830/WF/TR/BZ	20	120-277V	>80	3000K	Wide Flood	2000	103	Trunnion	Std	–
60201	SLMFLD1A/020UNV840/WF/TR/BZ	20	120-277V	>80	4000K	Wide Flood	2200	111	Trunnion	Prm	–
60191	SLMFLD1A/020UNVD830/WF/BZ/D	20	120-277V	>80	3000K	Wide Flood	2000	103	Knuckle	Std	Sensor
60192	SLMFLD1A/020UNVD840/WF/BZ/D	20	120-277V	>80	4000K	Wide Flood	2200	111	Knuckle	Prm	Sensor
74908	SLMFLD1A/030UNV840/WF/BZ	30	120-277V	>80	4000K	Wide Flood	3400	110	Knuckle	Prm	–
74909	SLMFLD1A/030UNV850/WF/BZ	30	120-277V	>80	5000K	Wide Flood	3500	114	Knuckle	Prm	–
60202	SLMFLD1A/030UNV840/WF/TR/BZ	30	120-277V	>80	4000K	Wide Flood	3400	110	Trunnion	Prm	–
60203	SLMFLD1A/030UNV850/WF/TR/BZ	30	120-277V	>80	5000K	Wide Flood	3500	114	Trunnion	Prm	–
60193	SLMFLD1A/030UNVD840/WF/BZ/D	30	120-277V	>80	4000K	Wide Flood	3400	110	Knuckle	Prm	Sensor
60194	SLMFLD1A/030UNVD850WF/BZ/D	30	120-277V	>80	5000K	Wide Flood	3500	114	Knuckle	Prm	Sensor
74910	SLMFLD1A/050UNV840/WF/BZ	50	120-277V	>80	4000K	Wide Flood	6100	119	Knuckle	Prm	–
74911	SLMFLD1A/050UNV850/WF/BZ	50	120-277V	>80	5000K	Wide Flood	6300	121	Knuckle	Prm	–
60204	SLMFLD1A/050UNV840/WF/TR/BZ	50	120-277V	>80	4000K	Wide Flood	6100	119	Trunnion	Prm	–
60205	SLMFLD1A/050UNV850/WF/TR/BZ	50	120-277V	>80	5000K	Wide Flood	6300	121	Trunnion	Prm	–
60195	SLMFLD1A/050UNVD840/WF/BZ/D	50	120-277V	>80	4000K	Wide Flood	6100	119	Knuckle	Prm	Sensor
60196	SLMFLD1A/050UNVD850/WF/BZ/D	50	120-277V	>80	5000K	Wide Flood	6300	121	Knuckle	Prm	Sensor
60108	SLMFLD1A/100UNV840/WF/BZ	100	120-277V	>80	4000K	Wide Flood	12,300	123	Trunnion	Prm	–
60109	SLMFLD1A/100UNV850/WF/BZ	100	120-277V	>80	5000K	Wide Flood	12,300	123	Trunnion	Prm	–
60197	SLMFLD1A/100UNVD840/WF/BZ/D	100	120-277V	>80	4000K	Wide Flood	12,300	123	Trunnion	Prm	Sensor
60199	SLMFLD1A/100UNVD850/WF/BZ/D	100	120-277V	>80	5000K	Wide Flood	12,300	123	Trunnion	Prm	Sensor

*LPW per LM79 report
**Prm is for DLC Premium, Std is for DLC Standard
For further information and to learn more about utility rebates, contact your local SYLVANIA sales representative.

Photometric Data

20/30W*
SLMFLD1A/0X0UNV8X0/WF/BX
Isofootcandle Lines at 10' Mounting Height

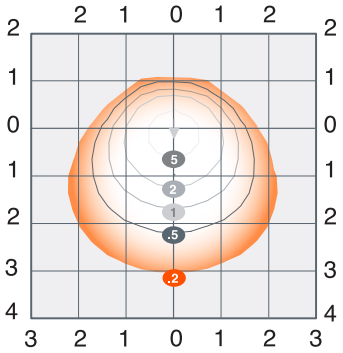

50W
SLMFLD1A/050UNV840/WF/BZ
Isofootcandle Lines at 10' Mounting Height

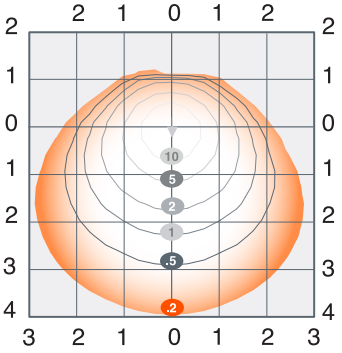

100W
SLMFLD1A/100UNV8X0/WF/BZ
Isofootcandle Lines at 10' Mounting Height

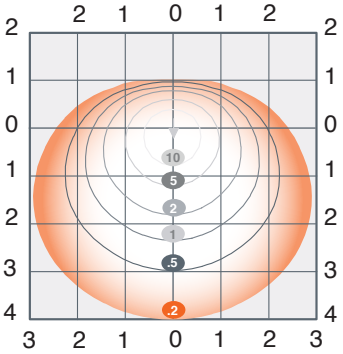

For other mounting heights apply the following multipliers:

Mounting Height	6'	8'	10'	12'	15'
Multiplier	2.8	1.6	1.00	0.69	0.44

*For 30W please use 1.5 multiplier+

Physical Information

Lamp Description	(W) Width	(H) Height
20-30W	9.1 in (230 mm)	10.5 in (266 mm)
50W	10.6 in (270 mm)	11.3 in (286 mm)
100W	12.4 in (315 mm)	14.8 in (375.9 mm)

Weight: 20W/30W: 3.5lbs (1.6kg) 50W: 5lbs (2.3kg) 100W: 8 lbs (3.6kg)
EPA (Effective Projected Area): 20W/30W: 0.53ft² 50W: 0.71ft² 100W: 0.83ft²

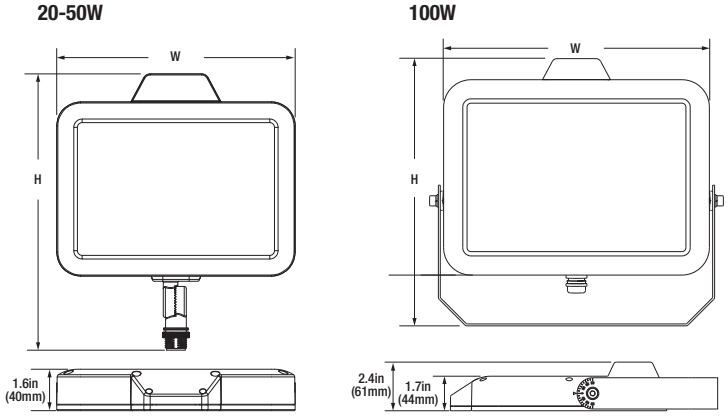

Options Information

Sensor: Motion/Daylight sensor

Sensor Default Settings*

Sensitivity: 100%
Standby Time: 5 mins
Photosensor Level: 30%
Detection Range: 10m diameter at 12m distance from luminaire

Note: Sensor settings are not field adjustable.
*Applies only to models ending in /D.

Poles

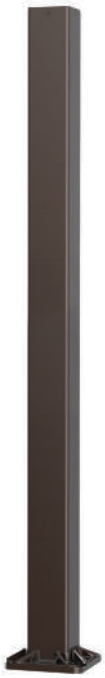

Product Features

- Poles available in three heights: 20', 25', and 30'
- 20' and 25' poles are 4" square; 30' pole is 5" square
- Offered in 11 gauge
- Fabricated from the highest grade structural steel

Specifications

- Square steel pole with powder coat paint. The standard color is bronze
- Polycarbonate spring loaded top cover
- Pre-drilled mounting holes on all 4 sides with Polycarbonate grommets
- Reinforced 3" x 6" cast iron hand-hole with ground screw included
- Easily secured base cover included
- Bolt circle template included

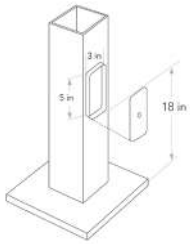

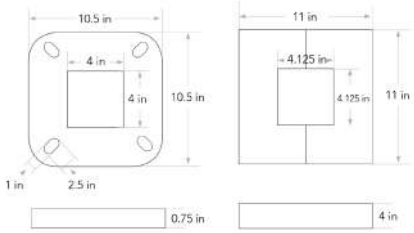

4x4 Anchor Base Included

Base Plate Cover Included Packaged Separately

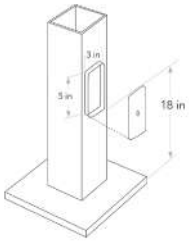

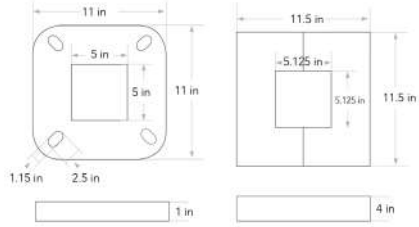

5x5 Anchor Base Included

Base Plate Cover Included Packaged Separately

Ordering Guide

POLESQS	1A	/	XX	/	XXG	/	XXIN	/	BZ
Product Name	Generation		Height		Gauge		Size		Finish
POLESQS =	1A		20 = 20 feet		11G = 11		04IN = 4 inches		Bronze
Square Straight Pole			25 = 25 feet				05IN = 5 inches		
			30 = 30 feet						

Ordering Information (Poles)

Item Number	Ordering Abbreviation	Shape	Height (ft)	Gauge (in)	Size (in)	Finish
60659	POLESQS1A/20/11G/4IN/BZ	SquareStraight	20	11	4	Bronze
60661	POLESQS1A/25/11G/4IN/BZ	SquareStraight	25	11	4	Bronze
60663	POLESQS1A/30/11G/5IN/BZ	SquareStraight	30	11	5	Bronze

Ordering Information (Accessories)

Item Number	Ordering Abbreviation	Description	Compatibility
60665	POLESQS1A/ANJBOLT/304	3/4" x 30" Anchor Bolt	For use with 60659 and 60661
60666	POLESQS1A/ANJBOLT/364	1" x 36" Anchor Bolt	For use with 60663
60667	POLESQS1A/TENON/4IN/BZ	4" Tenon Mount, Bronze Finish	For use with 60659 and 60661
60668	POLESQS1A/TENON/5IN/BZ	5" Tenon Mount, Bronze Finish	For use with 60663
65013	POLESQS1A/DBLTENON/4IN/BZ	4" Double Tenon Bracket, Bronze Finish	For use with 60659 and 60661
65014	POLESQS1A/DBLTENON/5IN/BZ	5" Double Tenon Bracket, Bronze Finish	For use with 60663
65015	POLESQS1A/DBLBULHORN/4IN/BZ	4" Double Bullhorn Bracket, Bronze Finish	For use with 60659 and 60661
65016	POLESQS1A/DBLBULHORN/5IN/BZ	5" Double Bullhorn Bracket, Bronze Finish	For use with 60663
60845	POLESQS1A/TPLBULHORN/4IN/BZ	4" Triple Bullhorn Bracket, Bronze Finish	For use with 60659 and 60661
60846	POLESQS1A/TPLBULHORN/5IN/BZ	5" Triple Bullhorn Bracket, Bronze Finish	For use with 60663

For further information and to learn more about utility rebates, contact your local SYLVANIA sales representative.

3/4" x 30" NAED 60665

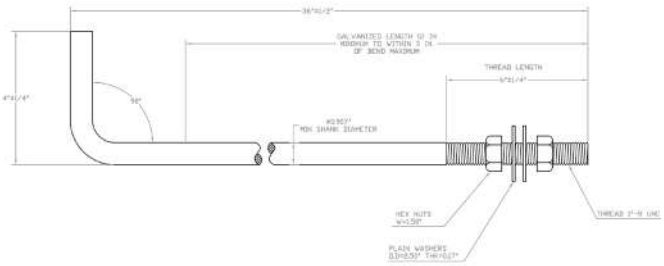

1" x 36" NAED 60666

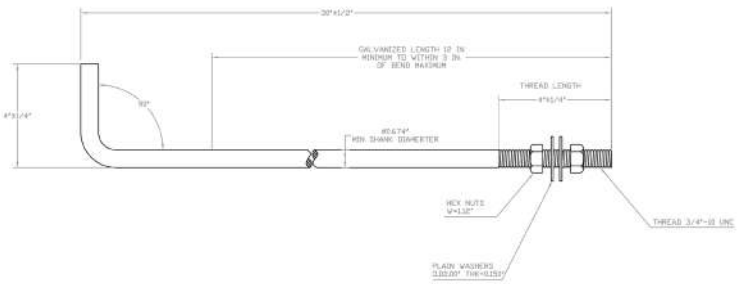

Maximum EPA Loading per Pole

Ordering Abbreviation	85 MPH	90 MPH	100 MPH	110 MPH	120 MPH	130 MPH	140 MPH
POLE1A/SQ/20/11	10.4	8.7	6	4	2.6	1.4	0.5
POLE1A/SQ/25/11	5	3.8	1.8	0.4	–	–	–
POLE1A/SQ/30/11	7	5.4	3	1.3	0.2	–	–

Fixture Pole Loading

Pole Description	85 MPH			90 MPH			100 MPH			110 MPH			120 MPH		
	Flood 20/30	Flood 50	Flood 100	Flood 20/30	Flood 50	Flood 100	Flood 20/30	Flood 50	Flood 100	Flood 20/30	Flood 50	Flood 100	Flood 20/30	Flood 50	Flood 100
With Double Tenon, Knuckle, 2 Slim Floodlights															
POLESQS1A/20/11G/4IN/BZ	Y	Y	Y	Y	Y	Y	Y	Y	Y	Y	Y	Y	Y	Y	N
POLESQS1A/25/11G/4IN/BZ	Y	Y	Y	Y	Y	Y	N	N	N	N	N	N	N	N	N
POLESQS1A/30/11G/5IN/BZ	Y	Y	Y	Y	Y	Y	Y	Y	Y	N	N	N	N	N	N
With Double Bullhorn, Knuckle, 2 Slim Floodlights															
POLESQS1A/20/11G/4IN/BZ	Y	Y	Y	Y	Y	Y	Y	Y	Y	Y	Y	Y	Y	Y	N
POLESQS1A/25/11G/4IN/BZ	Y	Y	Y	Y	Y	Y	N	N	N	N	N	N	N	N	N
POLESQS1A/30/11G/5IN/BZ	Y	Y	Y	Y	Y	Y	Y	Y	Y	N	N	N	N	N	N
With Triple Bullhorn, Knuckle, 3 Slim Floodlights															
POLESQS1A/20/11G/4IN/BZ	Y	Y	Y	Y	Y	Y	Y	Y	Y	Y	Y	Y	N	N	N
POLESQS1A/25/11G/4IN/BZ	Y	Y	Y	Y	Y	N	N	N	N	N	N	N	N	N	N
POLESQS1A/30/11G/5IN/BZ	Y	Y	Y	Y	Y	Y	N	N	N	N	N	N	N	N	N

Wind Map

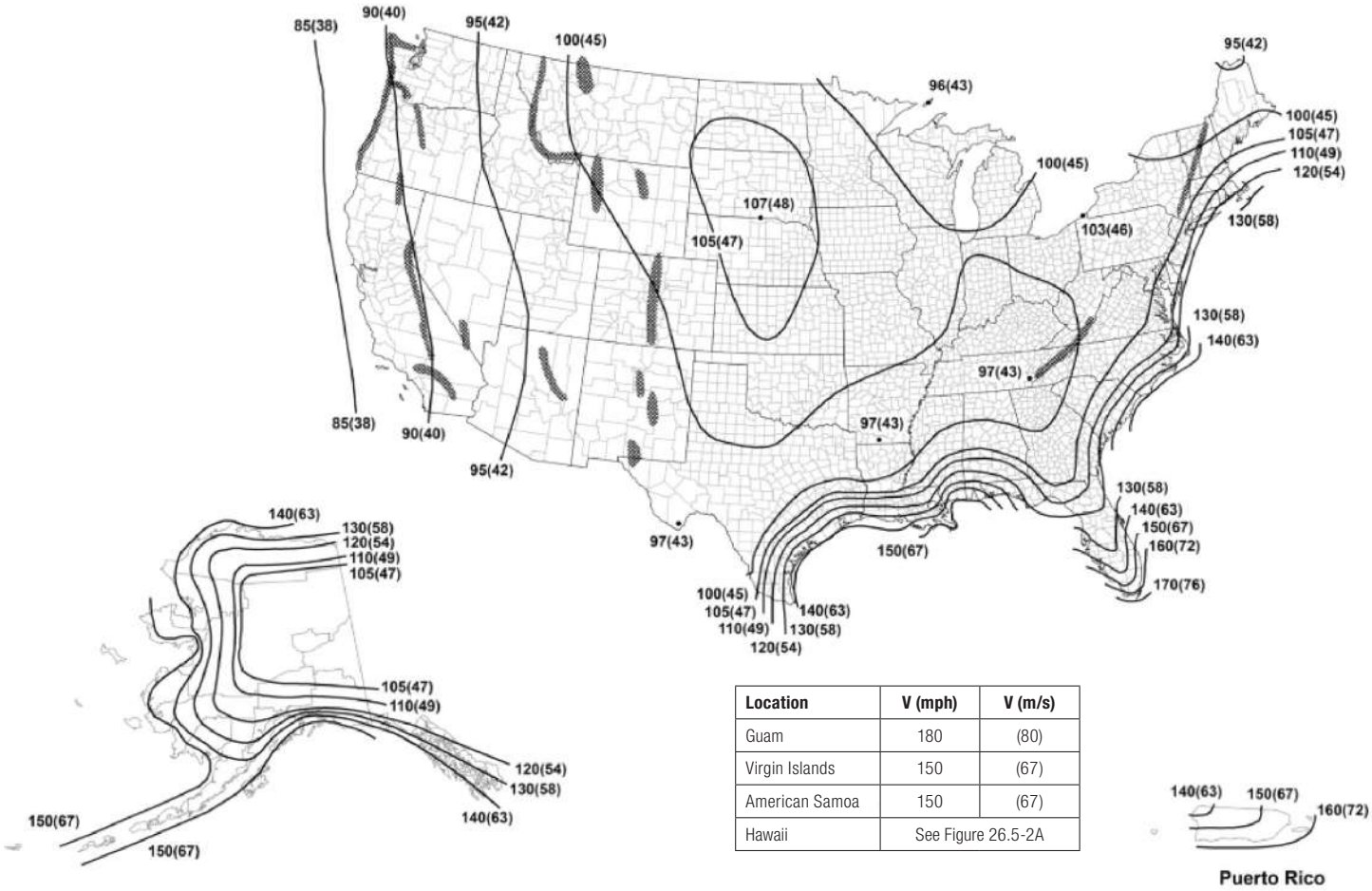

Location	V (mph)	V (m/s)
Guam	180	(80)
Virgin Islands	150	(67)
American Samoa	150	(67)
Hawaii	See Figure 26.5-2A	

Notes: Dark shading indicates a special wind region.

1. Values are nominal design 3-s gust wind speeds in miles per hour (m/s) at 33 ft. (10 m) above ground for Exposure Category C.
2. Linear interpolation is permitted between contours. Point values are provided to aid with interpolation.
3. Islands, coastal areas, and land boundaries outside the last contour shall use the last wind speed contour.
4. Mountainous terrain, gorges, ocean promontories, and special wind regions shall be examined for unusual wind conditions.
5. Wind speeds correspond to approximately a 15% probability of exceedance in 50 years. (Annual Exceedance Probability = 0.00333, MRI = 300 years).
6. Location-specific basic wind speeds shall be permitted to be determined using www.atcouncil.org/windspeed.

LEDVANCE LLC
200 Ballardvale Street
Wilmington, MA 01887 USA
Phone 1-800-LIGHTBULB (1-800-544-4828)
www.sylvania.com

SYLVANIA and LEDVANCE are registered trademarks.
All other trademarks are those of their respective owners.
Licensee of product trademark SYLVANIA in general lighting.
Specifications subject to change without notice.

/sylvania /sylvania

© 2019 LEDVANCE LLC

SYLVANIA Luminaires

ValueLED™ Slim Floodlight

Item #	
Type	
Project	
Notes	
Date	

Application

The Slim Floodlight luminaires are lightweight, compact and designed for landscape, flood and signage applications.

Benefits and Features

- Compact profile for discrete exterior illumination
- IP65 rated with wide flood distribution
- Adjustable 1/2" NPS knuckle arm
- Meets DLC Premium requirements to maximize rebate opportunities
- Up to 117 LPW
- 4000K and 5000K color temperature
- CRI >80
- Offered in 30 and 50 watts
- Energy savings up to 80%

Electrical

- 120-277VAC
- Power Factor >90%
- THD <20%

Rated Life

- 150,000 hours (L_{70})

Warranty

- 5-year

Ambient Operating Range

- -40°F to +104°F (-40°C to +40°C)

Certifications and Listings

- cULus
- RoHS
- FCC
- DLC Premium

Wattage Comparison

Traditional Source	Traditional System Wattage	LED System Wattage	Energy Savings
150W Inc	150	30	80%
50W HPS	62	30	52%
70W HPS	91	30	67%
100W HPS	120	30	67%
100W MH	130	30	69%
300W Inc	300	50	83%
150W HPS	170	50	71%
150W MH	188	50	73%
175W MH	210	50	76%

Installation

- ValueLED Slim Floodlight luminaires can be knuckle mounted with included 1/2" NPS for mounting to junction box (please see Ordering Information).

Ordering Guide

SLMFLD	2A	/	XXX	UNV	8	XX	/	WF	KN	/	XX
SLMFLD = Slim Floodlight	Generation 2A		Wattage 30 = 30 Watts 50 = 50 Watts	Voltage UNV = 120-277V	CRI 8 = >80	Color Temp (CCT) 40 = 4000K 50 = 5000K		Distribution WF = Wide Flood	Mounting KN = Knuckle Mounting		Color/Finish BZ = Bronze

Ordering Information

Item Number	Ordering Abbreviation	Wattage	Input Voltage	CRI	Color Temp	Total Fixture Lumens	LPW	DLC	Mounting	Color
61177	SLMFLD2A/030UNV840/WFKN/BZ	30	120-277	>80	4000K	3400	114	Prm	Knuckle	Bronze
61178	SLMFLD2A/030UNV850/WFKN/BZ	30	120-277	>80	5000K	3400	114	Prm	Knuckle	Bronze
61179	SLMFLD2A/050UNV840/WFKN/BZ	50	120-277	>80	4000K	5700	117	Prm	Knuckle	Bronze
61180	SLMFLD2A/050UNV850/WFKN/BZ	50	120-277	>80	5000K	5700	117	Prm	Knuckle	Bronze

Photometric Data

SLMFLD2A/030UNV840

FC at 10' mounting height when aimed at 30 degrees

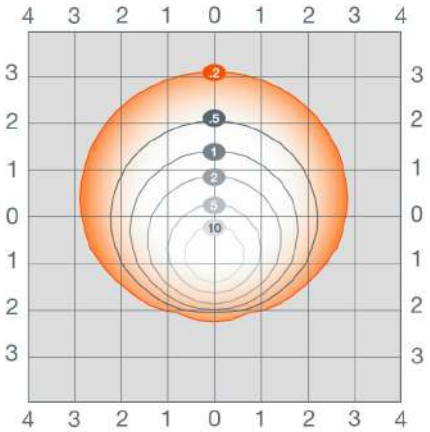

SLMFLD2A/050UNV840

FC at 10' mounting height when aimed at 30 degrees

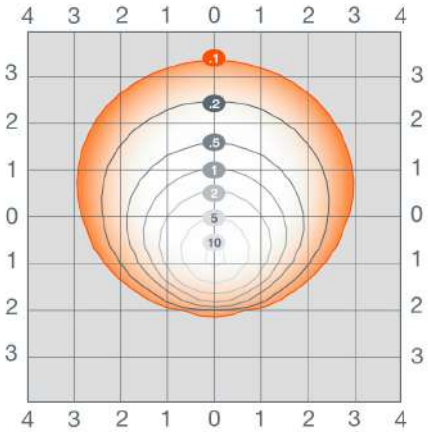

Physical Information

30W

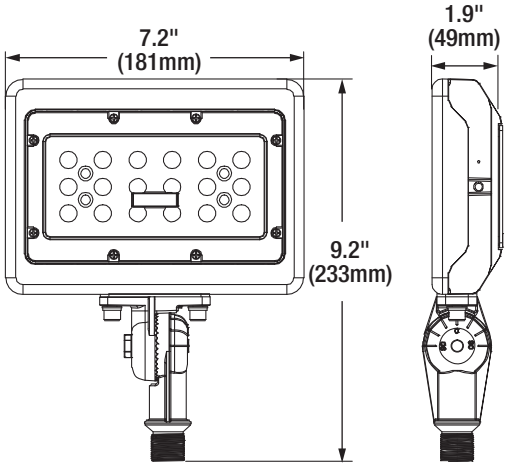

50W

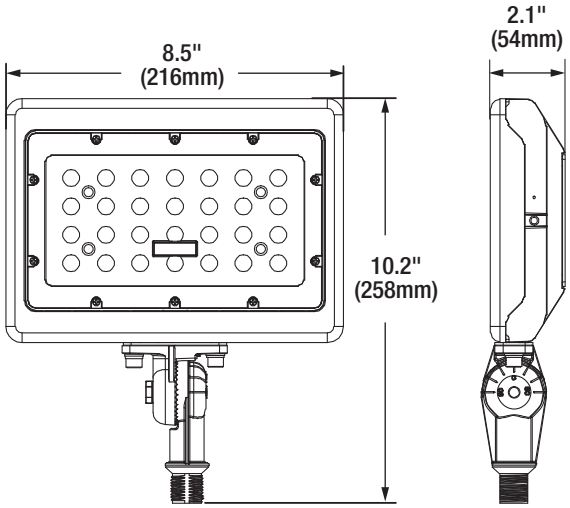

Luminaire Description	Length	Width	Height
30W Knuckle Mount	7.2"	1.9"	9.2"
50W Knuckle Mount	8.5"	2.1"	10.2"

EPA
30W 0.33ft^2
50W 0.45ft^2

LEDVANCE LLC
200 Ballardvale Street
Wilmington, MA 01887 USA
Phone 1-800-LIGHTBULB (1-800-544-4828)
www.sylvania.com

SYLVANIA and LEDVANCE are registered trademarks.
All other trademarks are those of their respective owners.
Licensee of product trademark SYLVANIA in general lighting.
Specifications subject to change without notice.

/sylvania /sylvania

Name:
Email:
Phone:

© 2020 LEDVANCE LLC

SYLVANIA Luminaires

Bulkhead

Catalog #	Type
Project	
Notes	
Date	
Prepared by	

Dimensions

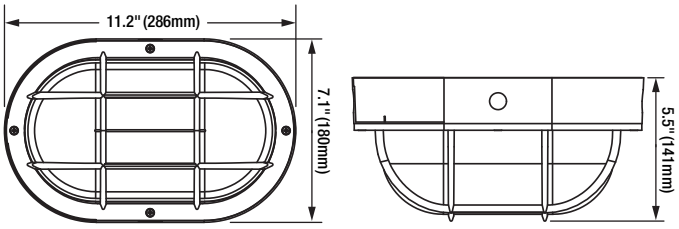

Product Features

The Bulkhead luminaires are environmentally preferable LED alternatives to traditional luminaires, offering up to 87% in energy savings. Ideal in place of traditional luminaires, or as new installations, the Bulkhead series is offered with one lumen package for illuminating building exteriors, outdoor corridors, walkways, and stairwells.

The traditionally styled luminaire allows for easy installation. SYLVANIA luminaires assure optimum light engine performance for extended service and rated life (≥90,000 hours L_{70}).

Wattage Comparison Chart

Traditional Source	Traditional System Wattage	LED System Wattage	Energy Savings
60W Inc	60	10	83%
13W CFL	13	10	23%
75W Inc	75	10	87%
20W CFL	20	10	50%

Specifications

Weight: 4.00lb (1.183kg)

Construction: Die Cast aluminum housing with powder coat paint. The standard color is black.

LED System: LED system with a life rating of >90,000 hours at L_{70} @ 25°C. Luminaire efficacy up to 90 LPW.

Electrical: Offered in 10 watts, the luminaire is designed to operate through the 120-277 VAC universal voltage range. The LED driver is a constant current device. The power factor is ≥90% and THD is ≤20%.

Color Characteristics: CRI >80; CCT of 4000K or 5000K.

Optics: UV resistant polycarbonate lens.

Installation: Luminaire mounts to recessed outlet box.

Operating Temperature: -40°F to +104°F (-40°C to +40°C).

Listings: cULus listed to UL1598C rated for wet locations.

Warranty: Standard 5-year luminaire warranty (LEDLUM001).

Note: Specifications subject to change without notice. IES files available online.

Ordering Guide

Item Number:

BULKHED	1A	/	010	UNV	8	XX	/	XX	/	BL
Product Name BULKHED	Generation 1A		Wattage 010 = 10W	Voltage UNV = 120-277V	CRI 8 >80	Color Temp (CCT) 40 = 4000K 50 = 5000K		Mounting SM = Surface Mount		Color/Finish BL = Black

Photometric Data

BULKHED1A010UNV840SMBL
Isofootcandle Lines at 10' Mounting Height

For other mounting heights apply the following multipliers:

Mounting Height	6'	8'	10'	12'	15'
Multiplier	2.8	1.6	1.00	0.69	0.44

Ordering Information

Item Number	Ordering Abbreviation	Power (W)	Input Voltage	CRI	Color Temp (CCT)	Distribution	Lumens	LPW	Mounting
60206	BULKHED1A/010UNV840/SM/BL	10	120-277	>80	4000K	Type V	900	90	Surface
60207	BULKHED1A/010UNV850/SM/BL	10	120-277	>80	5000K	Type V	900	90	Surface

LEDVANCE LLC
200 Ballardvale Street
Wilmington, MA 01887 USA
Phone 1-800-LIGHTBULB (1-800-544-4828)
www.sylvania.com

SYLVANIA and LEDVANCE are registered trademarks.
All other trademarks are those of their respective owners.
Licensee of product trademark SYLVANIA in general lighting.
Specifications subject to change without notice.

/sylvania /sylvania

© 2018 LEDVANCE LLC

SYLVANIA Luminaires

Jelly Jar

Catalog #	Type
Project	
Notes	
Date	
Prepared by	

Dimensions

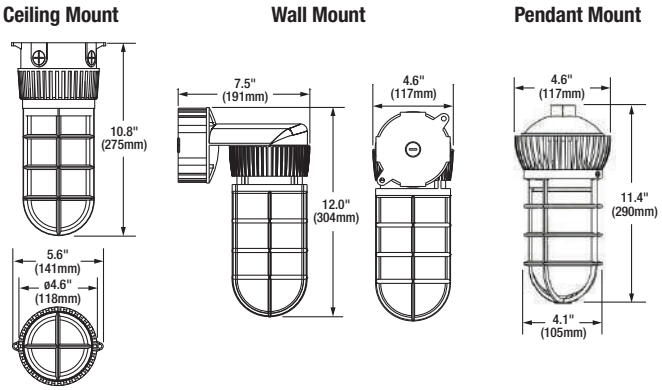

Product Features

The Jelly Jar luminaires are environmentally preferable LED alternatives to traditional luminaires, offering up to 87% in energy savings. Ideal in place of traditional luminaires, or as new installations, the Jelly Jar series is offered with three mounting options for illuminating building exteriors, outdoor corridors, walkways, and stairwells.

The traditionally styled luminaire allows for easy installation. SYLVANIA luminaires assure optimum light engine performance for extended service and rated life (≥150,000 hours L_{70}).

Wattage Comparison Chart

Traditional Source	Traditional System Wattage	LED System Wattage	Energy Savings
60W Inc	60	10	83%
13W CFL	13	10	23%
75W Inc	75	10	87%
20W CFL	20	10	50%

Specifications

Weight: 5.7 lbs (2.3kg)

Construction: Die Cast aluminum housing with powder coat paint. The standard color is grey.

LED System: LED system with a life rating of >150,000 hours at L_{70} @ 25°C. Luminaire efficacy up to 90 LPW.

Electrical: Offered in 10 watts, the luminaire is designed to operate through the 120-277 VAC universal voltage range. The LED driver is a constant current device. The power factor is ≥90% and THD is ≤20%.

Color Characteristics: CRI >70; CCT of 4000K or 5000K.

Optics: Frosted glass lens.

Installation: The luminaire can be ceiling, wall, or pendant mounted (mounting accessories not included).

Operating Temperature: -40°F to +104°F (-40°C to +40°C).

Listings: cETLus listed to UL1598 for wet locations.

Warranty: Standard 5-year luminaire warranty (LEDLUM001).

Note: Specifications subject to change without notice. IES files available online.

Ordering Guide

Item Number:

JELYJAR	1A	/	10	XXX	7	XX	/	XX	/	GR
Product Name JELYJAR	Generation 1A		Wattage (UNV) 010 = 10 Watts	Voltage UNV = 120-277V	CRI 7 = >70	Color Temp (CCT) 40 = 4000K 50 = 5000K		Mounting CM = Ceiling Mount PM = Pendant WM = Wall Mount		Color Finish GR = Grey

Photometric Data

JELYJAR1A/010UNV/740
Isofootcandle Lines at 10' Mounting Height

For other mounting heights apply the following multipliers:

Mounting Height	6'	8'	10'	12'	15'
Multiplier	2.8	1.6	1.00	0.69	0.44

Ordering Information

Item Number	Ordering Abbreviation	Power (W)	Input Voltage	CRI	Color Temp (CCT)	Distribution	Lumens	LPW	Mounting	Bug Rating
60167	JELYJAR1A/010UNV740/CM/GR	10	120-277	>70	4000K	Type V	900	90	Ceiling	B1-U3-G1
60168	JELYJAR1A/010UNV750/CM/GR	10	120-277	>70	5000K	Type V	900	90	Ceiling	B1-U3-G1
60169	JELYJAR1A/010UNV740/PM/GR	10	120-277	>70	4000K	Type V	900	90	Pendant	B1-U3-G1
60170	JELYJAR1A/010UNV750/PM/GR	10	120-277	>70	5000K	Type V	900	90	Pendant	B1-U3-G1
60171	JELYJAR1A/010UNV740/WM/GR	10	120-277	>70	4000K	Type V	900	90	Wall	B1-U3-G1
60172	JELYJAR1A/010UNV750/WM/GR	10	120-277	>70	5000K	Type V	900	90	Wall	B1-U3-G1

LEDVANCE LLC
200 Ballardvale Street
Wilmington, MA 01887 USA
Phone 1-800-LIGHTBULB (1-800-544-4828)
www.sylvania.com

SYLVANIA and LEDVANCE are registered trademarks.
All other trademarks are those of their respective owners.
Licensee of product trademark SYLVANIA in general lighting.
Specifications subject to change without notice.

/sylvania /sylvania

© 2019 LEDVANCE LLC

SYLVANIA Luminaires

Square Light

Catalog #	Type
Project	
Notes	
Date	
Prepared by	

Dimensions

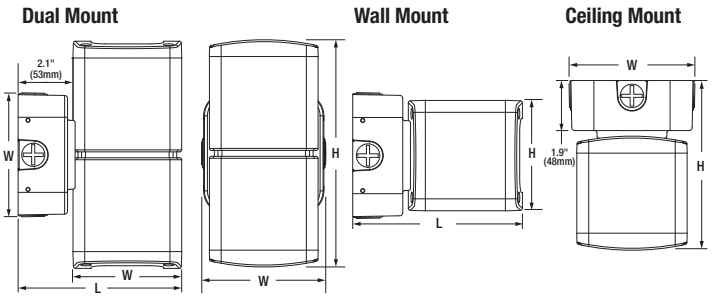

	L	W	H
Dual Mount	6.4" (162mm)	4.9" (124mm)	9" (228mm)
Wall Mount	6.4" (162mm)	4.9" (124mm)	4.9" (124mm)
Ceiling Mount	4.9" (124mm)	4.9" (124mm)	6.9" (175mm)
Pendant Mount	4.9" (124mm)	4.9" (124mm)	46" (1168mm)

Product Features

The Square Light luminaires are environmentally preferable LED alternatives to traditional luminaires, offering up to 91% in energy savings. Ideal in place of traditional luminaires, or as new installations, the Square Light series is offered with four mounting options for illuminating building exteriors, outdoor corridors, canopies, and stairwells.

The luminaire allows for easy installation. SYLVANIA luminaires assure optimum light engine performance for extended service and rated life (≥150,000 hours L_{70}).

Wattage Comparison Chart

Traditional Source	Traditional System Wattage	LED System Wattage	Energy Savings
23W CFL	23	13	43%
42W CFL	46	13	72%
100W Inc	100	13	87%
150W Inc	50	13	91%
35W HPS	45	13	71%
50W HPS	62	13	79%
150W Inc	150	26	83%
50W HPS	62	26	58%
70W HPS	91	26	71%

Specifications

Weight: WM: 4.4 lbs (2kg) DM: 7.1 lbs (3.2kg)
CM: 4.6 lbs (2.1kg) PM: 5.1 lbs (2.3kg)

Construction: Die Cast aluminum housing with powder coat paint. The standard color is bronze.

LED System: LED system with a life rating of >150,000 hours at L_{70} @ 25°C. Luminaire efficacy up to 109 LPW.

Electrical: Offered in 13 or 26 watts, the luminaire is designed to operate through the 120-277 VAC universal voltage range. The LED driver is a constant current device. The power factor is ≥90% and THD is ≤20%.

Color Characteristics: CRI >70; CCT of 4000K or 5000K.

Optics: UV resistant tempered glass lens.

Installation: Luminaire can be pendant mounted (PM), wall mounted (WM/DM), or ceiling mounted (CM). Please note mounting in ordering guide.

Operating Temperature: -40°F to +104°F (-40°C to +40°C).

Listings: cULus listed to UL1598 rated for wet locations.

Warranty: Standard 5-year luminaire warranty (LEDLUM002).

Note: Specifications subject to change without notice. IES files available online.

c UL us LISTED RoHS compliant FC DLC* DLC PREMIUM*

*See page 2 for DLC listings

Ordering Guide

Item Number:

SQLIGHT	1A	/	XX	UNV	7	XX	/	XX	/	BZ
Product Name SQLIGHT	Generation 1A		Wattage (UNV) 013 = 13W 026 = 26W	Voltage UNV = 120-277V	CRI 7 = >70	Color Temp (CCT) 40 = 4000K 50 = 5000K		Mounting CM = Ceiling Mount DM = Dual Wall Mount PM = Pendant Mount WM = Wall Mount		Color/Finish BZ = Bronze

SYLVANIA

Photometric Data

SQRLIGHT1A/013UNV740/WM/BZ
Isofootcandle Lines at 15' Mounting Height

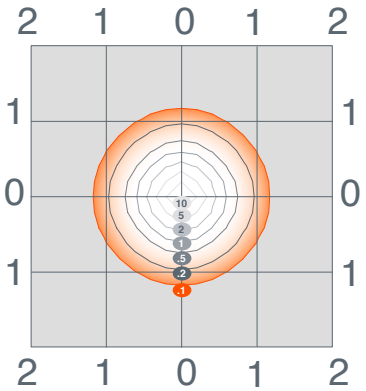

For other mounting heights apply the following multipliers:

Mounting Height	10'	12'	15'	18'	20'
Multiplier	2.25	1.56	1.00	0.69	0.56

Ordering Information

Item Number	Ordering Abbreviation	Power (W)	Input Voltage	CRI	Color Temp (CCT)	Lumens	LPW*	Mounting	Distribution	BUG Rating	DLC**
60208	SQLIGHT1A/013UNV740/WM/BZ	13	120-277	>70	4000K	1390	109	Wall Mount	Type V S	B2-U1-G0	Prm
60209	SQLIGHT1A/013UNV750/WM/BZ	13	120-277	>70	5000K	1390	109	Wall Mount	Type V S	B2-U1-G0	Prm
60210	SQLIGHT1A/026UNV740/DM/BZ	26	120-277	>70	4000K	2750	105	Dual Direction/Wall Mount	Type V S	B1-U4-G3	–
60211	SQLIGHT1A/026UNV750/DM/BZ	26	120-277	>70	5000K	2750	105	Dual Direction/Wall Mount	Type V S	B1-U4-G3	–
60212	SQLIGHT1A/013UNV740/CM/BZ	13	120-277	>70	4000K	1390	109	Ceiling Mount	Type V S	B2-U1-G0	Std
60213	SQLIGHT1A/013UNV750/CM/BZ	13	120-277	>70	5000K	1390	109	Ceiling Mount	Type V S	B2-U1-G0	Std
60214	SQLIGHT1A/013UNV740/PM/BZ	13	120-277	>70	4000K	1390	109	Pendant Mount	Type V S	B2-U1-G0	Std
60215	SQLIGHT1A/013UNV750/PM/BZ	13	120-277	>70	5000K	1390	109	Pendant Mount	Type V S	B2-U1-G0	Std

*LPW per LM79 report.
**Prm is for DLC Premium. Std is for DLC Standard.

LEDVANCE LLC
200 Ballardvale Street
Wilmington, MA 01887 USA
Phone 1-800-LIGHTBULB (1-800-544-4828)
www.sylvania.com

SYLVANIA and LEDVANCE are registered trademarks.
All other trademarks are those of their respective owners.
Licensee of product trademark SYLVANIA in general lighting.
Specifications subject to change without notice.

/sylvania /sylvania

© 2019 LEDVANCE LLC

SYLVANIA Luminaires

Bullet Floodlight

Catalog #	Type
Project	
Notes	
Date	
Prepared by	

Dimensions

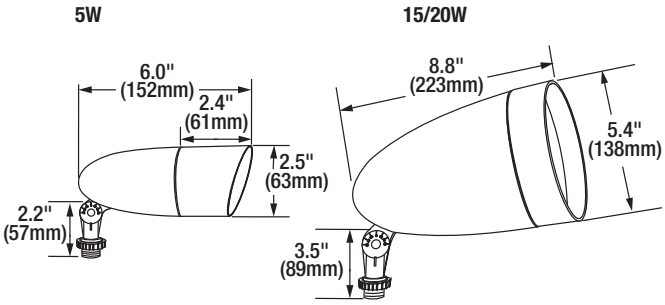

Product Features

- Lightweight, compact design
- Medium flood distribution
- Easy installation and adjustment with integrated knuckle
- 90% energy savings over traditional light sources

Wattage Comparison Chart

Traditional Source	Traditional System Wattage	LED System Wattage	Energy Savings
50W Halogen	50	5	90%
75W Halogen	75	15	80%
90W Halogen	90	15	83%
35 W HPS	42	15	64%
35 W HPS	42	20	52%
50 W HPS	62	20	68%
90W Halogen	90	20	78%
150 W Halogen	150	20	87%

Specifications

Weight: 5W: 2.2lbs (1.0kg) 15/20W: 4.3lbs (2.0kg)

Construction: Die Cast aluminum housing with powder coat paint. The standard color is bronze.

LED System: LED system with a life rating of >150,000 hours at L_{70} @ 25°C. Luminaire efficacy up to 110 LPW.

Electrical: Offered in 5, 15 or 20 watts, the luminaire is designed to operate through the 120-277 VAC universal voltage range. The 5W LED driver has a 2kV, the 15-20W driver has 4kV inherent surge suppression, and is a constant current device. The power factor is ≥90% and THD is ≤20%.

Color Characteristics: CRI >70; CCT of 3000K, 4000K or 5000K.

Optics: UV resistant tempered glass lens.

Operating Temperature: -40°F to +104°F (-40°C to +40°C).

Listings: cULus listed to UL1598C rated for wet locations.

Warranty: Standard 5-year luminaire warranty (LEDLUM001).

Note: Specifications subject to change without notice. IES files available online.

c UL us LISTED

RoHS compliant

*See page 2 for DLC listings

Ordering Guide

Item Number:

BULLTFL	1A	/	XXX	XXX	7	XX	/	MF	/	BZ
Product Name BULLTFL	Generation 1A		Wattage (UNV) 005 = 5 Watts 015 = 15 Watts 020 = 20 Watts	Voltage UNV = 120-277V	CRI 7 = >70	Color Temp (CCT) 30 = 3000K 40 = 4000K 50 = 5000K		Distribution MF = Medium Flood		Color Finish BZ = Bronze

Photometric Data

5W BULLTFL1A/005UNV740MFBZ
10' setback with 30° tilt

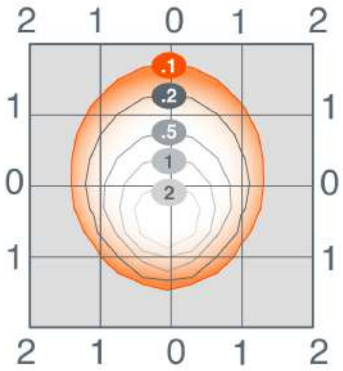

150W BULLTFL1A/15UNV740MFBZ
10' setback with 30° tilt

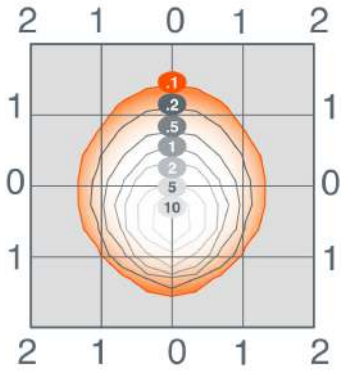

20W BULLTFL1A/20UNV740MFBZ
10' setback with 30° tilt

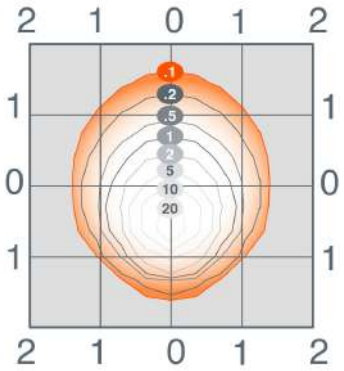

Ordering Information

Item Number	Ordering Abbreviation	Power (W)	Input Voltage	CRI	Color Temp (CCT)	Distribution	Lumens	LPW	DLC
60255	BULLTFL1A/005UNV730/MF/BZ	5	120-277	>70	3000K	5 x 5	550	100	Premium
60183	BULLTFL1A/005UNV740/MF/BZ	5	120-277	>70	4000K	5 x 5	550	110	Premium
60184	BULLTFL1A/005UNV750/MF/BZ	5	120-277	>70	5000K	5 x 5	550	110	Premium
60254	BULLTFL1A/015UNV730/MF/BZ	15	120-277	>70	3000K	4 x 4	1250	90	Standard
60181	BULLTFL1A/015UNV740/MF/BZ	15	120-277	>70	4000K	4 x 4	1250	90	Standard
60182	BULLTFL1A/015UNV750/MF/BZ	15	120-277	>70	5000K	4 x 4	1250	90	Standard
60179	BULLTFL1A/020UNV740/MF/BZ	20	120-277	>70	4000K	4 x 4	2000	100	Standard
60180	BULLTFL1A/020UNV750/MF/BZ	20	120-277	>70	5000K	4 x 4	2000	100	Standard

LEDVANCE LLC
200 Ballardvale Street
Wilmington, MA 01887 USA
Phone 1-800-LIGHTBULB (1-800-544-4828)
www.sylvania.com

SYLVANIA and LEDVANCE are registered trademarks.
All other trademarks are those of their respective owners.
Licensee of product trademark SYLVANIA in general lighting.
Specifications subject to change without notice.

/sylvania /sylvania

© 2019 LEDVANCE LLC

SYLVANIA Luminaires

Bollard

Catalog #	Type
Project	
Notes	
Date	
Prepared by	

Dimensions

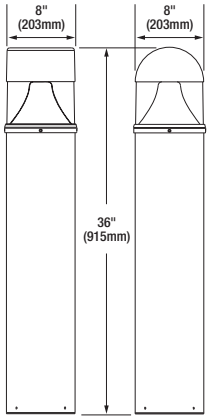

Product Features

- Easy to install
- Durable polycarbonate lens
- Up to 88% energy savings compared to traditional sources

Wattage Comparison Chart

Traditional Source	Traditional System Wattage	LED System Wattage	Energy Savings
23W CFL	23	18	22%
35W HPS	42	18	57%
42W CFL	46	18	61%
100W Inc	100	18	82%
150W Inc	150	18	88%
50W HPS	62	18	71%
50W MH	62	18	71%
50W HPS	62	38	39%
50W MH	62	38	39%
70W HPS	91	38	58%
70W MH	79	38	52%
100W HPS	120	38	68%
100W MH	130	38	71%

Specifications

Weight: 26.5 lbs (12.0kg)

Construction: Die Cast aluminum housing with powder coat paint. The standard color is bronze.

LED System: LED system with a life rating of >79,000 hours at L_{70} @ 25°C. Luminaire efficacy up to 110 LPW.

Electrical: Offered in 18 and 38 watts, the luminaire is designed to operate through the 120-277 VAC universal voltage range. Offered in 38 watts, the luminaire is designed to operate at the 347 VAC voltage range. The LED driver has a 4kV inherent surge suppression and is a constant current device, meeting UL1310 and UL48 Class 2 with built-in over temperature protection. The power factor is ≥90% and THD is ≤20%.

Color Characteristics: CRI >80; CCT of 3000K, 4000K or 5000K.

Optics: Aluminum reflector and clear UV resistant polycarbonate lens.

Operating Temperature: -40°F to +104°F (-40°C to +40°C).

Listings: cULus listed to UL1598 rated for wet locations.

Warranty: Standard 5-year luminaire warranty (LEDLUM001).

Note: Specifications subject to change without notice. IES files available online.

Ordering Guide

Item Number:

BOLLARD	1A	/	XXX	XXX	8	XX	/	R8	X	/	BZ
Product Name BOLLARD	Generation 1A		Wattage (UNV) 018 = 18 Watts 038 = 38 Watts	Voltage UNV = 120-277V 347 = 347V	CRI 8 = >80	Color Temp (CCT) 30 = 3000K 40 = 4000K 50 = 5000K		Shape R8 = 8" Round	Top F = Flat Top R = Round Top		Color Finish BZ = Bronze

Photometric Data

BOLLARD1A/018UNV840/R8F/BZ
Isofootcandle Lines at 3' Mounting Height

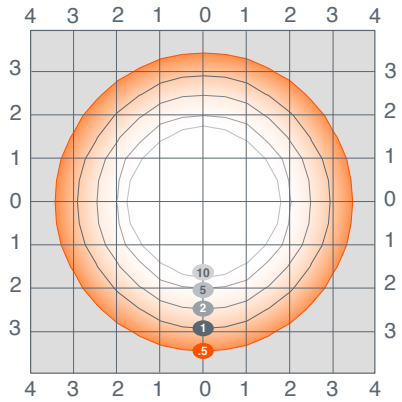

BOLLARD1A/038UNV830/R8R/BZ
Isofootcandle Lines at 3' Mounting Height

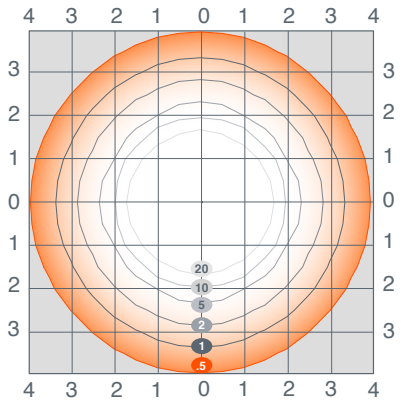

Ordering Information

Item Number	Ordering Abbreviation	Power (W)	Input Voltage	CRI	Color Temp (CCT)	Lumens	LPW	DLC	Bug Rating	MTO*
60173	BOLLARD1A/018UNV830/R8F/BZ	18	120-277	>80	3000K	2035	110	Std	B-1 U-3 G-1	–
60174	BOLLARD1A/018UNV840/R8F/BZ	18	120-277	>80	4000K	2035	110	Std	B-1 U-3 G-1	–
60175	BOLLARD1A/018UNV850/R8F/BZ	18	120-277	>80	5000K	2035	110	Std	B-1 U-3 G-1	–
60176	BOLLARD1A/038UNV830/R8F/BZ	38	120-277	>80	3000K	3600	95	Std	B-1 U-3 G-1	–
60177	BOLLARD1A/038UNV840/R8F/BZ	38	120-277	>80	4000K	3600	95	Std	B-1 U-3 G-1	–
60178	BOLLARD1A/038UNV850/R8F/BZ	38	120-277	>80	5000K	3600	95	Std	B-1 U-3 G-1	–
60185	BOLLARD1A/018UNV830/R8R/BZ	18	120-277	>80	3000K	2035	110	Std	B-1 U-3 G-1	–
60186	BOLLARD1A/018UNV840/R8R/BZ	18	120-277	>80	4000K	2035	110	Std	B-1 U-3 G-1	–
60187	BOLLARD1A/018UNV850/R8R/BZ	18	120-277	>80	5000K	2035	110	Std	B-1 U-3 G-1	–
60188	BOLLARD1A/038UNV830/R8R/BZ	38	120-277	>80	3000K	3600	95	Std	B-1 U-3 G-1	–
60189	BOLLARD1A/038UNV840/R8R/BZ	38	120-277	>80	4000K	3600	95	Std	B-1 U-3 G-1	–
60190	BOLLARD1A/038UNV850/R8R/BZ	38	120-277	>80	5000K	3600	95	Std	B-1 U-3 G-1	–
60656	BOLLARD1A/038347830/R8R/BZ	38	347	>80	3000K	3600	95	Std	B-1-U-3 G-1	MTO
60657	BOLLARD1A/038347840/R8R/BZ	38	347	>80	4000K	3600	95	Std	B-1-U-3 G-1	MTO
60658	BOLLARD1A/038347850/R8R/BZ	38	347	>80	5000K	3600	95	Std	B-1-U-3 G-1	MTO
60653	BOLLARD1A/038347830/R8F/BZ	38	347	>80	3000K	3600	95	Std	B-1-U-3 G-1	MTO
60654	BOLLARD1A/038347840/R8F/BZ	38	347	>80	4000K	3600	95	Std	B-1-U-3 G-1	MTO
60655	BOLLARD1A/038347850/R8F/BZ	38	347	>80	5000K	3600	95	Std	B-1-U-3 G-1	MTO

*Made To Order

LEDVANCE LLC
200 Ballardvale Street
Wilmington, MA 01887 USA
Phone 1-800-LIGHTBULB (1-800-544-4828)
www.sylvania.com

SYLVANIA and LEDVANCE are registered trademarks.
All other trademarks are those of their respective owners.
Licensee of product trademark SYLVANIA in general lighting.
Specifications subject to change without notice.

/sylvania /sylvania

© 2019 LEDVANCE LLC

ULTRA LED™ RT5/6 HO

Recessed Downlight Kit

SYLVANIA ULTRA RT5/6 HO is a universal input voltage 5" and 6" compatible LED recessed downlight kit that creates high performing white light and is optimized for new construction and retrofit applications utilizing pin based compact fluorescent lamps. Installation is done quickly and easily in most standard six-inch frames.

The RT5/6 HO downlight is offered in 650 lumen, 700 lumen, 900 lumen and 1500 lumen options and achieves up to 88 lumens per watt.

The RT5/6 HO is designed to deliver light output comparable to traditional 1x13W, 1x18W, 1x26W and 2x26W pin based compact fluorescent luminaires.

Application Information

Application Notes

1. Operating temperature range between -4°F and +104°F (-20°C and +40°C).
2. Suitable for dry, damp or wet indoor or outdoor locations.
3. Compatible with Philips Bodine ELI-S-20 Emergency Lighting Micro Inverter.
4. Designed to install in standard 6" CFL mounting frame. For a list of compatible housings, please refer to www.sylvania.com/RT6.
5. For detailed warranty information, please see www.sylvania.com/RT6.
6. The RT5/6HO 650 and 700 lumen is compatible with 120V Phase cut dimmers and 277V Leviton Dimmer model IPX06-70Z .
7. The RT5/6 HO 900 and 1500 lumen are compatible with Leviton 0-10V dimmer model IP710-DL.
8. Installation performed as a stand-alone kit (without frame) is recommended for hard ceiling. Installation of a recessed incandescent frame is recommended for tiled ceiling application for proper support of the retrofit kit.

Key Features & Benefits

- Three input voltages:
  - 120V
  - 120-277V Universal
  - 347V
- Lumen package:
  - 650 lumens @ 8 watts (line voltage dimmable)
  - 700 lumens @ 8 watts (line voltage dimmable)
  - 900 lumens @ 13 watts (0-10V Dimmable)
  - 1500 lumens @ 17 watts (0-10V Dimmable)
- Replacement for 13W, 18W, 26W and 32W CFL pin based lamps
- Fits in standard 5" and 6" CFL mounting frame
- CCT: 2700K, 3000K, 3500K & 4000K
- CRI of >80 and >90
- 35,000 and 50,000 hour life (L_{70})
- Suitable for dry, damp and wet indoor or outdoor locations (650lm Indoor only)
- IC rated (except 650lm version)
- UL1598 Listed and Classified for stand-alone and retrofit applications
- Reduces energy consumption up to 34%
- Lasts up to 4 times longer than compact fluorescent lamps
- No warm-up time, instant-on with full light output and stable lamp to lamp color
- Integrated white trim and metal conduit adaptor (included) for direct replacement
- Suitable for use in 8" applications using optional trim extender accessory

Product Offering

Ordering Abbreviation	Wattage	CCT
LED/RT5/6/HO/650	8	3000K, 4000K
LED/RT5/6/HO/700	8	2700K, 3000K, 3500K, 4000K
LED/RT5/6/HO/900	13	2700K, 3000K, 3500K, 4000K
LED/RT5/6/HO/1500	17	3000K, 3500K, 4000K

Specifications and Certifications

SYLVANIA

Specification Data

Catalog #	Type
Project	
Comments	
Prepared by	

Specifications

Energy Data

Minimum Starting Temp: -20°C (-4°F)

EMI/RFI: RT6/HO 1500 lumen: FCC Title 47 CFR, Part 15, Class B
RT6/HO 900 lumen: FCC Title 47 CFR, Part 15, Class A

Sound Rating: <24dBA

Input Voltage: 120-277V

Power Factor: >0.90

Input Frequency: 60Hz

THD: <20%

Maximum Ambient Operating Temperature (Non-Insulated Ceiling): 40°C (104°F)

Lighting Data

Lumen Output: 650, 700, 900 and 1500

Color

Color Rendering Index (CRI): >80 and >90

Ordering Information

Item Number	Ordering Abbreviation	Recessed Housing	Replaced CFL Wattage	Nominal Wattage (W)	Delivered Light Output (lm)	Input Voltage	LPW	Color Temperature	Avg. Rated Life (hrs)*	Packaging Configuration	Dimmable
75331	LED/RT5/6/650/930	5" and 6"	13W	8	650	120V	72	3000K	35,000	2/case	YES (Phase Cut)
75332	LED/RT5/6/650/940	5" and 6"	13W	8	650	120V	72	4000K	35,000	2/case	YES (Phase Cut)
75228	LED/RT/5/6/HO/700/827	5" and 6"	13W	8	700	120-277V	87	2700K	50,000	4/case	YES (Phase Cut)
75229	LED/RT/5/6/HO/700/830	5" and 6"	13W	8	700	120-277V	87	3000K	50,000	4/case	YES (Phase Cut)
75230	LED/RT/5/6/HO/700/835	5" and 6"	13W	8	700	120-277V	87	3500K	50,000	4/case	YES (Phase Cut)
75231	LED/RT/5/6/HO/700/840	5" and 6"	13W	8	700	120-277V	87	4000K	50,000	4/case	YES (Phase Cut)
75137	LED/RT5/6/HO/900/827	5" and 6"	18W	13	900	120-277V	69	2700K	50,000	4/case	YES (0-10V Low Voltage)
75138	LED/RT5/6/HO/900/830	5" and 6"	18W	13	900	120-277V	69	3000K	50,000	4/case	YES (0-10V Low Voltage)
75140	LED/RT5/6/HO/900/835	5" and 6"	18W	13	900	120-277V	69	3500K	50,000	4/case	YES (0-10V Low Voltage)
75139	LED/RT5/6/HO/900/840	5" and 6"	18W	13	900	120-277V	69	4000K	50,000	4/case	YES (0-10V Low Voltage)
75327	LED/RT5/6/HO/900/840/347V	5" and 6"	18W	13	900	347V	69	4000K	50,000	4/Case	NO
72528	LED/RT5/6/1500/HO/830	5" and 6"	26W & 32W	17	1500	120-277V	88	3000K	50,000	4/case	YES (0-10V Low Voltage)
72529	LED/RT5/6/1500/HO/835	5" and 6"	26W & 32W	17	1500	120-277V	88	3500K	50,000	4/case	YES (0-10V Low Voltage)
72530	LED/RT5/6/1500/HO/840	5" and 6"	26W & 32W	17	1500	120-277V	88	4000K	50,000	4/case	YES (0-10V Low Voltage)
75328**	LED/RT5/6/HO/1500/840/347V	5" and 6"	26W & 32W	17	1500	347V	88	4000K	50,000	4/case	NO

*LED lamp life is defined as the number of hours when 50% of an average group of identical lamps reached 70% of its initial lumens.
**Not ENERGY STAR® rated.

Ordering Guide

LED	/	RT5/6	/	1500	/	HO	/	8	30
LED		Product Name RT5/6 5/6 = fits 5" and 6" frames		Light Output 1500lm, 900lm, 700lm, 650lm		High Output		CRI >80	Color Temperature 2700K, 3000K, 3500K, 4000K

Energy Savings

Basic Product Description	LED Lumens	LED Life	Traditional Lamp Types	Lumens	Life	Watts Saved With RT6	RT6 Energy Savings*	RT6 Life Benefit
RT5/6 HO 8W	700	50,000	13W CFL DD, DT	800	16,000	5	$27	3X
RT5/6 HO 13W	900	50,000	18W CFL DD, DT	1200	16,000	5	$27	3X
RT5/6/HO 17W	1500	50,000	26W CFL DD, DT	1800	16,000	9	$49	3X
RT5/6/HO 17W	1500	50,000	32W CFL DD, DT	2400	16,000	15	$82	3X

* Based on $0.11/kWh over 50,000 hours life.

Accessories

RT5/6 Retrofit Trim	
75095	RT/5/6/TRIM/DKBZ
75097	RT/5/6/TRIM/BLK
75098	RT/5/6/TRIM/ORBZ
75099	RT/5/9/TRIM/SN
Trim Ring Extender	
75082	RT6/8/TRIMEXT
Rough In Frame	
71708	LED/RT6HO/FRAME

75097

75098

75099

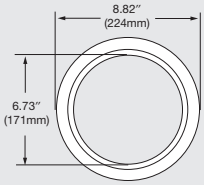

75082

71708

Assembly Diagram

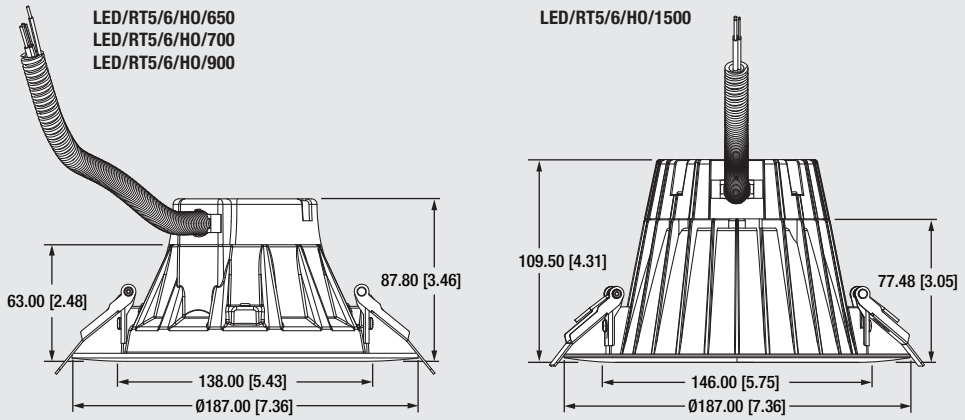

Dimensions are in mm [in]

Photometric Information

Luminous Intensity Distribution Diagram

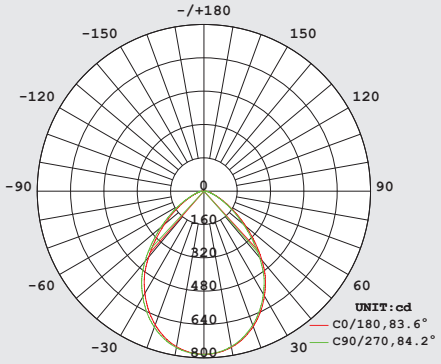

Illuminance at Distance

	Illuminance Edge	Illuminance Center	Beam Diameter
2 ft	48.2 fc	214.5 fc	3.4 ft
4 ft	12.1 fc	53.6 fc	6.7 ft
6 ft	5.4 fc	23.8 fc	10.1 ft
8 ft	3.0 fc	13.4 fc	13.4 ft
10 ft	1.9 fc	8.6 fc	16.8 ft
12 ft	1.3 fc	6.0 fc	20.1 ft

RT5/6 HO 1500 lumen

Illuminance at Distance

	Illuminance Edge	Illuminance Center	Beam Diameter
2 ft	27.4 fc	143.5 fc	3.8 ft
4 ft	6.8 fc	35.9 fc	7.6 ft
6 ft	3.0 fc	15.9 fc	11.4 ft
8 ft	1.7 fc	9.0 fc	15.2 ft
10 ft	1.1 fc	5.7 fc	19.0 ft
12 ft	0.8 fc	4.0 fc	22.8 ft

RT5/6 900 lumen

Illuminance at Distance

	Illuminance Edge	Illuminance Center	Beam Diameter
2 ft	21.6 fc	96.0 fc	3.4 ft
4 ft	5.4 fc	124.0 fc	6.7 ft
6 ft	2.4 fc	10.7 fc	10.1 ft
8 ft	1.3 fc	6.0 fc	13.4 ft
10 ft	0.9 fc	3.8 fc	16.8 ft
12 ft	0.6 fc	2.7 fc	20.1 ft

RT5/6 700 lumen

LEDVANCE LLC
200 Ballardvale Street
Wilmington, MA 01887 USA
Phone 1-800-LIGHTBULB (1-800-544-4828)
www.sylvania.com

SYLVANIA and LEDVANCE are registered trademarks.
All other trademarks are those of their respective owners.
Licensee of product trademark SYLVANIA in general lighting.
Specifications subject to change without notice.

/sylvania /sylvania

© 2019 LEDVANCE LLC

SYLVANIA Luminaire

ValueLED™ Contractor Series RT Screw-based Smooth Reflector

Application

Ideal for retrofit applications in healthcare, hospitality, office, residential and retail using 4 inch, 5 inch & 6 inch housings.

Benefits and Features

- Lumen Package:
  - RT4 with 550 lumens
  - RT5/6 with 625 lumens
- Complete product mix with all color temperatures available: 2700K, 3000K, 4000K and 5000K
- Integrated white trim, smooth reflector, socket adaptor, airtight ring (included)
- No warm-up time, instant-on with full light output and consistent lamp to lamp color
- RT5/6 is compatible with 5 inch & 6 inch housings
- CRI >80
- Offered in 8W and 9W
- Available beam angle: 110°

Electrical

- 120VAC

Rated Life

- 11,000 hours (L_{70})

Warranty

- 3-year

Ambient Operating Range

- -4°F to +104°F (-20°C to +40°C)

Certifications and Listings

- UL

RT4 RT5/6

Wattage Comparison

Traditional Source	Traditional System Wattage	LED System Wattage	Energy Savings
Incandescent	50W	8W	86%
Incandescent	65W	9W	86%

Installation

- Suitable for indoor and outdoor dry, damp and wet locations.
- Suitable for dimmers or in housings controlled by a dimmer. For a list of compatible dimmers, please refer to https://www.sylvania.com/en-us/products/solid-state-lighting-led/Pages/ULTRADownlight-LED-Retrofit-Kits.aspx
- Compatible with Leviton SureSlide model 6674, Lutron Maesto C-L model MACL-153P, Lutron Caseta PD-6WCL, Lutron model DVCL-153P, and Leviton model 6672.
- The RT4 & RT5/6 Screw-based recessed downlight kits are dimmable down to 10% of full light output with compatible dimmers. The minimum dimming value is based on light output using compatible dimmers and may not be an indication of the kit's full rated capability.
- Not intended for use with emergency light fixtures or exit lights.
- For use in housings that can structurally support a lamp weighing one pound.
- RT5/6 designed to install in standard 5" and 6" insulated and non-insulated housings.

Specifications and Certifications

c UL US

SYLVANIA

Specification Data

Catalog #	Type
Project	
Comments	
Prepared by	

Ordering Guide

LED	/	RTX	/	XXX	/	8	XX
LED		RT4 RT5/6		Lumens 550, 625		CRI 8 = 80	Color Temperature 27 = 2700K 30 = 3000K 40 = 4000K 50 = 5000K

Ordering Information

Item Number	Ordering Abbreviation	Power (W)	Base Type	Replaces	Input Voltage (V)	Average Life (hrs)	CCT	Case Qty	Typical Lumens (lm)	CRI	Power Factor	Bulb Finish	ENERGY STAR®	T20	T24
70520	LED/RT4/550/827	8W	E26 Medium	50W	120	11,000	2700K	4	550	80	>90%	Frosted	No	No	No
70521	LED/RT4/550/830	8W	E26 Medium	50W	120	11,000	3000K	4	550	80	>90%	Frosted	No	No	No
74181	LED/RT4/550/840	8W	E26 Medium	50W	120	11,000	4000K	4	550	80	>90%	Frosted	No	No	No
74182	LED/RT4/550/850	8W	E26 Medium	50W	120	11,000	5000K	4	550	80	>90%	Frosted	No	No	No
74404	LED/RT56/625/827	9W	E26 Medium	65W	120	11,000	2700K	4	625	80	>90%	Frosted	No	No	No
74405	LED/RT56/625/830	9W	E26 Medium	65W	120	11,000	3000K	4	625	80	>90%	Frosted	No	No	No
74406	LED/RT56/625/840	9W	E26 Medium	65W	120	11,000	4000K	4	625	80	>90%	Frosted	No	No	No
74407	LED/RT56/625/850	9W	E26 Medium	65W	120	11,000	5000K	4	625	80	>90%	Frosted	No	No	No

Energy Savings

Basic Product Description	LED Life (hrs)	LED Lumens	Similar Incandescent (hrs)	Incandescent Lumens	Watts Saved	Energy Savings*	LED Life vs Incandescent
LED/RT4/550/8XX	11,000	550	2000	640	42W	$50	5.5X
LED/RT5/6/625/8XX	11,000	625	2000	640	56W	$67	5.5X

*Energy savings over life of lamp calculated at $0.11/kWh

Physical Information

Lamp Description	(A) Diameter in (mm)	(B) Height in (mm)
LED/RT4/550/8XX	5.51 (140)	2.68 (68)
LED/RT56/625/8XX	7.28 (185)	2.76 (70)

RT4

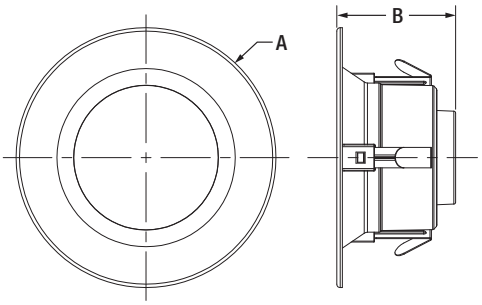

RT5/6

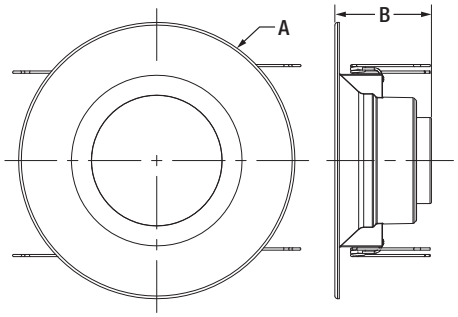

Photometric Data

RT4 550lm

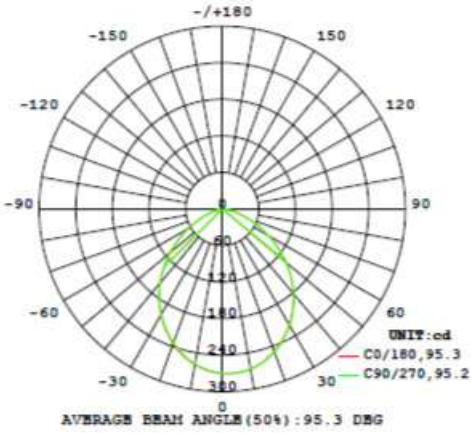

RT5/6 625lm

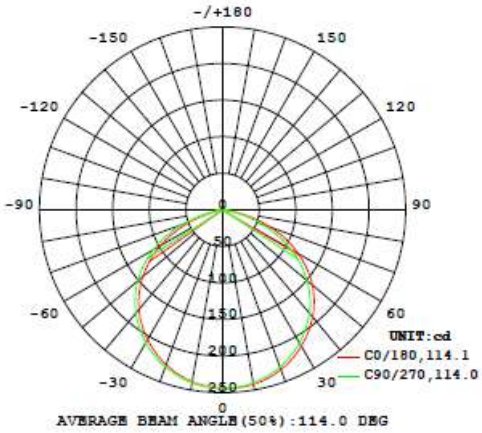

Accessories

RETROFIT TRIM (For non-Gimbal only, can be used with RT4 and RT5/6)

Item Number	Description	
61713	RT4/TRIM/BLK/G2	One tone: Black Trim & Black Reflector
61714	RT4/TRIM/ORBZ/G2	One tone: Bronze Trim & Bronze Reflector
61715	RT4/TRIM/SN/G2	One tone: Satin Nickel Trim & Satin Nickel Reflector
61716	RT/5/6/TRIM/BLK/G2	One tone: Black Trim & Black Reflector
61717	RT/5/6/TRIM/ORBZ/G2	One tone: Bronze Trim & Bronze Reflector
61718	RT/5/6/TRIM/SN/G2	One tone: Satin Nickel Trim & Satin Nickel Reflector

RT5/6

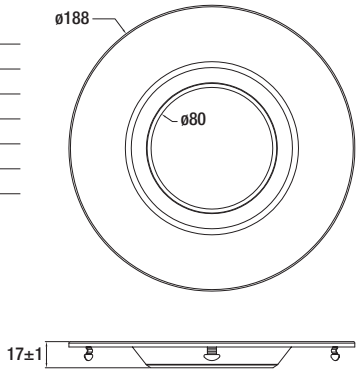

RT4

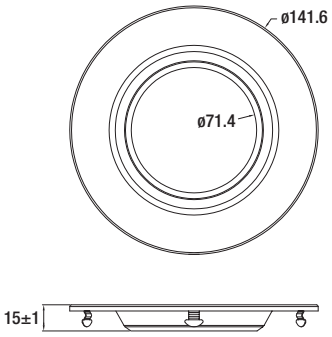

Dimensions in mm

Bronze

Black

Satin Nickel

LEDVANCE LLC
200 Ballardvale Street
Wilmington, MA 01887 USA
Phone 1-800-LIGHTBULB (1-800-544-4828)
www.sylvania.com

SYLVANIA and LEDVANCE are registered trademarks.
All other trademarks are those of their respective owners.
Licensee of product trademark SYLVANIA in general lighting.
Specifications subject to change without notice.

/sylvania /sylvania

© 2020 LEDVANCE LLC

SYLVANIA Luminaire

Hi-PerformanceLED™ RT Screw-based Smooth and Baffle Reflector

Application

Ideal for retrofit applications in healthcare, hospitality, office, residential and retail using 4 inch, 5 inch & 6 inch housings.

Benefits and Features

- Lumen Package:
  - RT4 with 600 and 675 lumens
  - RT5/6 with 700, 725, 900 and 1200 lumens
- Complete product mix with all color temperatures available: 2700K, 3000K, 4000K and 5000K
- Replacement for up to 100W incandescent lamps
- Integrated white trim, smooth or baffle reflector, socket adaptor, airtight ring (included)
- No warm-up time, instant-on with full light output and consistent lamp to lamp color
- RT5/6 is compatible with 5 inch & 6 inch housings
- Phase-Cut Dimmable
- CRI 90 (smooth) and 92 (baffle)
- Available beam angle: 110°

Electrical

- 120VAC

Rated Life

- 50,000 hours (L_{70})

Warranty

- 5-year

Ambient Operating Range

- -4°F to +104°F (-20°C to +40°C)

Certifications and Listings

- UL
- ENERGY STAR®
- Compliant with CEC Title 20 Efficiency Standards
- CEC Title 24 JA8 Listed (except 5000K)

Specifications and Certifications

Wattage Comparison

Traditional Source	Traditional System Wattage	LED System Wattage	Energy Savings
Smooth Reflector			
Incandescent	50W	9W	84%
Incandescent	65W	10W	84%
Incandescent	75W	13W	84%
Incandescent	100W	16W	84%
Baffle Reflector			
Incandescent	65W	8W	86%
Incandescent	65W	8.5W	86%
Incandescent	75W	10.5W	86%
Incandescent	100W	14W	86%

Installation

- Operating temperature range between -4°F and 104°F (-20°C and 40°C).
- Suitable for indoor and outdoor dry, damp and wet locations.
- Suitable for dimmers or in housings controlled by a dimmer. For a list of compatible dimmers, please refer to https://www.sylvania.com/en-us/products/solid-state-lighting-led/Pages/ULTRA-Downlight-LED-Retrofit-Kits.aspx
- The RT4 & RT5/6 Screw-based recessed downlight kits are dimmable down to 10% of full light output with compatible dimmers. The minimum dimming value is based on light output using compatible dimmers, and may not be an indication of the kit's full rated capability.
- Not intended for use with emergency light fixtures or exit lights.
- For use in housings that can structurally support a lamp weighing one pound.
- RT5/6 designed to install in standard 5" and 6" insulated and non-insulated housings.
- Compatible with Philips Bodine ELI-S-20 Emergency Lighting Micro Inverter, IOTA model IIS-375-LED and LVS CEPS-350-VOLT.

SYLVANIA

Catalog #	Type
Project	
Comments	
Prepared by	

Ordering Guide

LED	/	RTX	/	XXXX	/	9	XX	/	G2	/	CEC
LED		RT4 RT5/6		Lumens 600, 675, 700, 725, 900, 1200		CRI 9 = 90 (Smooth) 9 = 92 (Baffle)	Color Temperature 27 = 2700K 30 = 3000K 40 = 4000K 50 = 5000K		2nd Generation		CEC/Tier2 Compliant

Ordering Information

Item Number	Ordering Abbreviation	Power (W)	Base Type	Replaces	Input Voltage (V)	Average Life (hrs)	CCT	Case Qty	Typical Lumens (lm)	CRI	Power Factor	Bulb Finish	ENERGY STAR®	T20	T24
Smooth Reflector															
74285	LED/RT4/600/927	9	E26 Medium	50W	120	50,000	2700K	2	600	90	>90%	Frosted	Yes	Yes	Yes
74286	LED/RT4/600/930	9	E26 Medium	50W	120	50,000	3000K	2	600	90	>90%	Frosted	Yes	Yes	Yes
74288	LED/RT4/600/940	9	E26 Medium	50W	120	50,000	4000K	2	600	90	>90%	Frosted	Yes	Yes	Yes
74289	LED/RT4/600/950	9	E26 Medium	50W	120	50,000	5000K	2	600	90	>90%	Frosted	Yes	Yes	No
74290	LED/RT56/700/927	10	E26 Medium	65W	120	50,000	2700K	2	700	90	>90%	Frosted	Yes	Yes	Yes
74291	LED/RT56/700/930	10	E26 Medium	65W	120	50,000	3000K	2	700	90	>90%	Frosted	Yes	Yes	Yes
74292	LED/RT56/700/940	10	E26 Medium	65W	120	50,000	4000K	2	700	90	>90%	Frosted	Yes	Yes	Yes
74293	LED/RT56/700/950	10	E26 Medium	65W	120	50,000	5000K	2	700	90	>90%	Frosted	Yes	Yes	No
74294	LED/RT56/900/927	13	E26 Medium	75W	120	50,000	2700K	2	900	90	>90%	Frosted	Yes	Yes	Yes
74295	LED/RT56/900/930	13	E26 Medium	75W	120	50,000	3000K	2	900	90	>90%	Frosted	Yes	Yes	Yes
79750	LED/RT56/1200/927	16	E26 Medium	100W	120	50,000	2700K	2	1200	90	>90%	Frosted	Yes	Yes	Yes
79751	LED/RT56/1200/930	16	E26 Medium	100W	120	50,000	3000K	2	1200	90	>90%	Frosted	Yes	Yes	Yes
79753	LED/RT56/1200/940	16	E26 Medium	100W	120	50,000	4000K	2	1200	90	>90%	Frosted	Yes	Yes	Yes
Baffle Reflector															
40624	LED/RT4/675/927/G2/CEC	8	E26 Medium	65W	120	50,000	2700K	4	675	92	>90%	Frosted	Yes	Yes	Yes
40625	LED/RT4/675/930/G2/CEC	8	E26 Medium	65W	120	50,000	3000K	4	675	92	>90%	Frosted	Yes	Yes	Yes
40626	LED/RT4/675/940/G2/CEC	8	E26 Medium	65W	120	50,000	4000K	4	675	92	>90%	Frosted	Yes	Yes	Yes
40627	LED/RT4/675/950/G2/CEC	8	E26 Medium	65W	120	50,000	5000K	4	675	92	>90%	Frosted	Yes	Yes	No
40628	LED/RT5/6/725/927/G2/CEC	8.5	E26 Medium	65W	120	50,000	2700K	4	725	92	>90%	Frosted	Yes	Yes	Yes
40629	LED/RT5/6/725/930/G2/CEC	8.5	E26 Medium	65W	120	50,000	3000K	4	725	92	>90%	Frosted	Yes	Yes	Yes
40630	LED/RT5/6/725/940/G2/CEC	8.5	E26 Medium	65W	120	50,000	4000K	4	725	92	>90%	Frosted	Yes	Yes	Yes
40631	LED/RT5/6/725/950/G2/CEC	8.5	E26 Medium	65W	120	50,000	5000K	4	725	92	>90%	Frosted	Yes	Yes	No
40632	LED/RT5/6/900/927/G2/CEC	10.5	E26 Medium	75W	120	50,000	2700K	4	900	92	>90%	Frosted	Yes	Yes	Yes
40633	LED/RT5/6/900/930/G2/CEC	10.5	E26 Medium	75W	120	50,000	3000K	4	900	92	>90%	Frosted	Yes	Yes	Yes
40634	LED/RT5/6/900/940/G2/CEC	10.5	E26 Medium	75W	120	50,000	4000K	4	900	92	>90%	Frosted	Yes	Yes	Yes
40635	LED/RT5/6/900/950/G2/CEC	10.5	E26 Medium	75W	120	50,000	5000K	4	900	92	>90%	Frosted	Yes	Yes	No
65122	LED/RT5/6/1200/927/G2/CEC	14	E26 Medium	100W	120	50,000	2700K	4	1200	92	>90%	Frosted	Yes	Yes	Yes
65123	LED/RT5/6/1200/930/G2/CEC	14	E26 Medium	100W	120	50,000	3000K	4	1200	92	>90%	Frosted	Yes	Yes	Yes
65124	LED/RT5/6/1200/940/G2/CEC	14	E26 Medium	100W	120	50,000	4000K	4	1200	92	>90%	Frosted	Yes	Yes	Yes
65125	LED/RT5/6/1200/950/G2/CEC	14	E26 Medium	100W	120	50,000	5000K	4	1200	92	>90%	Frosted	Yes	Yes	No

Energy Savings

Basic Product Description	LED Life (hrs)	LED Lumens	Similar Incandescent (hrs)	Incandescent Lumens	Watts Saved	Energy Savings*	LED Life vs Incandescent
Smooth Reflector							
LED/RT4/600/9XX	50,000	600	2000	640	41W	$225	25X
LED/RT5/6/700/9XX	50,000	700	2000	640	55W	$302	25X
LED/RT5/6/900/9XX	50,000	900	2000	1600	62W	$341	25X
LED/RT5/6/1200/9XX	50,000	1200	2000	1600	84W	$462	25X
Baffle Reflector							
LED/RT4/675/9XX/G2	50,000	675	2000	640	57W	$314	25X
LED/RT5/6/725/9XX/G2	50,000	725	2000	640	57W	$314	25X
LED/RT5/6/900/9XX/G2	50,000	900	2000	1600	86W	$360	25X
LED/RT5/6/1200/9XX/G2	50,000	1200	2000	1600	86W	$360	25X

*Energy savings over life of lamp calculated at $0.11/kWh

Physical Information

Smooth Reflector

Lamp Description	(A) Diameter in (mm)	(B) Height in (mm)
LED/RT4/600/9XX	5.51 (140)	2.68 (68)
LED/RT5/6/700/9XX	7.28 (185)	2.76 (70)
LED/RT5/6/900/9XX	7.28 (185)	2.76 (70)
LED/RT5/6/1200/9XX	7.28 (185)	2.76 (70)

Smooth Reflector

RT4

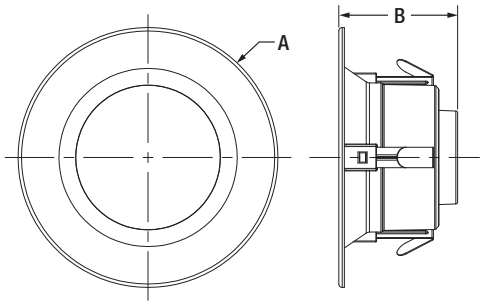

RT5/6

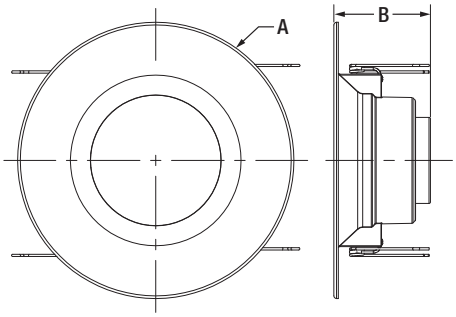

Baffle Reflector

Lamp Description	(A) Diameter in (mm)	(B) Height in (mm)
LED/RT4/675/9XX/G2	5.51 (140)	2.52 (64)
LED/RT5/6/725/9XX/G2	7.32 (186)	2.56 (65)
LED/RT5/6/900/9XX/G2	7.32 (186)	2.56 (65)
LED/RT5/6/1200/9XX/G2	7.32 (186)	2.56 (65)

Baffle Reflector

RT4

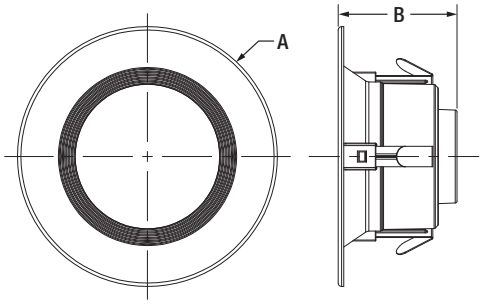

RT5/6

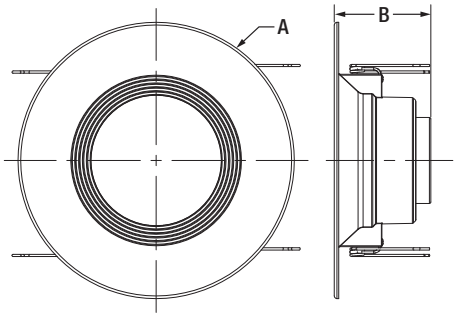

Photometric Data

Smooth Reflector

RT4 600lm

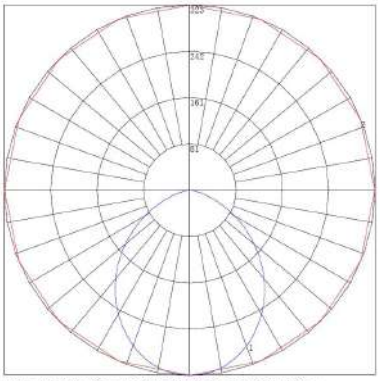

Maximum Candela = 322.82 Located At Horizontal Angle = 90, Vertical Angle = 1
1 - Vertical Plane Through Horizontal Angles (90 - 270) (Through Max. Cd.)
2 - Horizontal Cone Through Vertical Angle (1) (Through Max. Cd.)

RT5/6 700lm

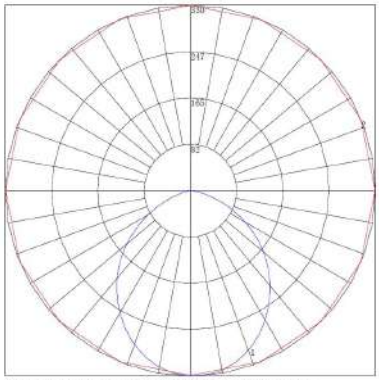

Maximum Candela = 329.6 Located At Horizontal Angle = 90, Vertical Angle = 1
1 - Vertical Plane Through Horizontal Angles (90 - 270) (Through Max. Cd.)
2 - Horizontal Cone Through Vertical Angle (1) (Through Max. Cd.)

RT5/6 900lm

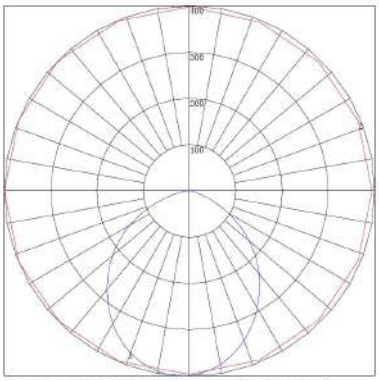

Maximum Candela = 400.13 Located At Horizontal Angle = 157.5, Vertical Angle = 4
1 - Vertical Plane Through Horizontal Angles (157.5 - 337.5) (Through Max. Cd.)
2 - Horizontal Cone Through Vertical Angle (4) (Through Max. Cd.)

RT5/6 1200lm

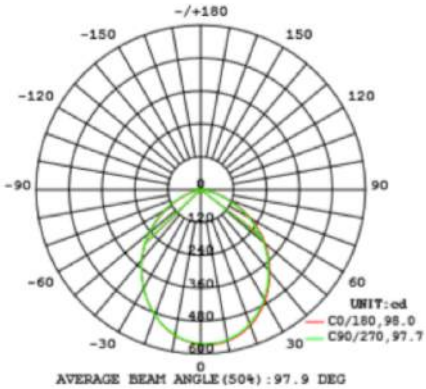

Baffle Reflector

RT4 675lm

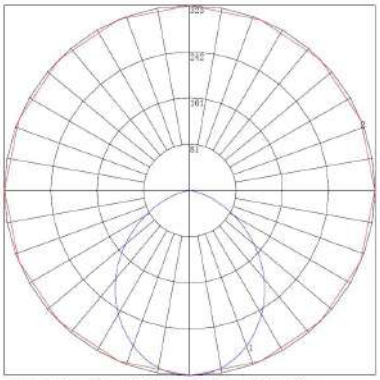

Maximum Candela = 322.82 Located At Horizontal Angle = 90, Vertical Angle = 1
1 - Vertical Plane Through Horizontal Angles (90 - 270) (Through Max. Cd.)
2 - Horizontal Cone Through Vertical Angle (1) (Through Max. Cd.)

RT5/6 725lm

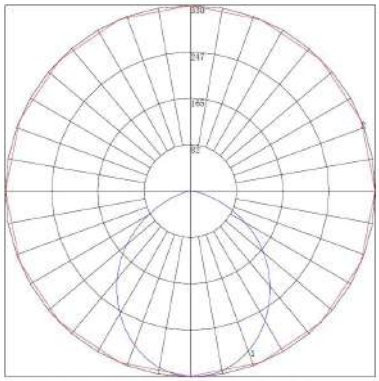

Maximum Candela = 329.6 Located At Horizontal Angle = 90, Vertical Angle = 1
1 - Vertical Plane Through Horizontal Angles (90 - 270) (Through Max. Cd.)
2 - Horizontal Cone Through Vertical Angle (1) (Through Max. Cd.)

RT5/6 900lm

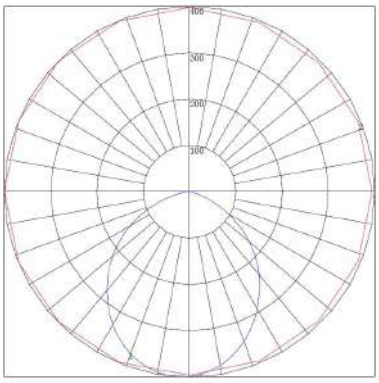

Maximum Candela = 400.13 Located At Horizontal Angle = 157.5, Vertical Angle = 4
1 - Vertical Plane Through Horizontal Angles (157.5 - 337.5) (Through Max. Cd.)
2 - Horizontal Cone Through Vertical Angle (4) (Through Max. Cd.)

RT5/6 1200lm

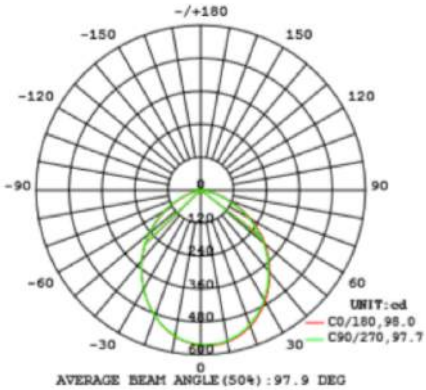

Accessories

Direct Plug-in for Pacific Region

Item Number	Description	Length	Pcs per Case
65126	LEDADAPTORDIRECTPLUGIN	~430mm	4

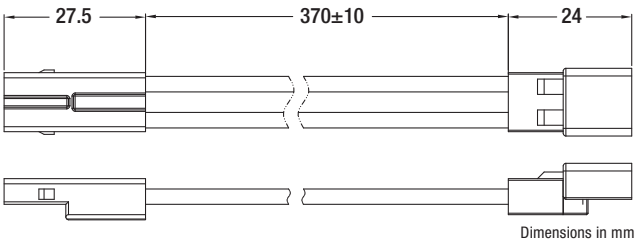

RETROFIT TRIM (For non-Gimbal only, can be used with RT4 and RT5/6)

Item Number	Description	
61713	RT4/TRIM/BLK/G2	One tone: Black Trim & Black Reflector
61714	RT4/TRIM/ORBZ/G2	One tone: Bronze Trim & Bronze Reflector
61715	RT4/TRIM/SN/G2	One tone: Satin Nickel Trim & Satin Nickel Reflector
61716	RT/5/6/TRIM/BLK/G2	One tone: Black Trim & Black Reflector
61717	RT/5/6/TRIM/ORBZ/G2	One tone: Bronze Trim & Bronze Reflector
61718	RT/5/6/TRIM/SN/G2	One tone: Satin Nickel Trim & Satin Nickel Reflector

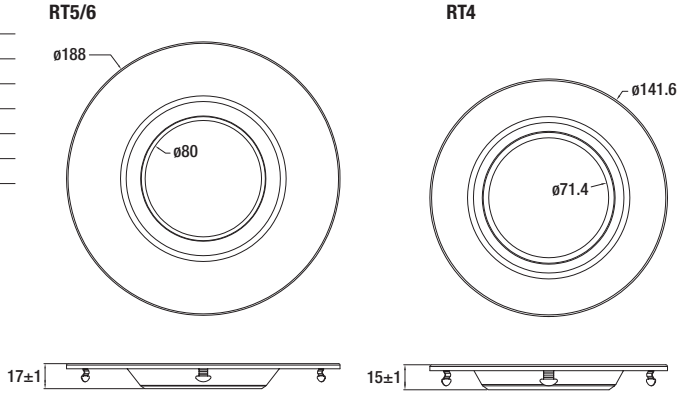

LEDVANCE LLC
200 Ballardvale Street
Wilmington, MA 01887 USA
Phone 1-800-LIGHTBULB (1-800-544-4828)
www.sylvania.com

SYLVANIA and LEDVANCE are registered trademarks.
All other trademarks are those of their respective owners.
Licensee of product trademark SYLVANIA in general lighting.
Specifications subject to change without notice.

/sylvania /sylvania

© 2020 LEDVANCE LLC

ULTRA LED™ RT8

Recessed Downlight Kit

The SYLVANIA ULTRA LED RT8 unit is an eight-inch LED recessed downlight kit creating high performing white light which is optimized for new construction and retrofit applications. Installation is done quickly and easily in most standard eight-inch frames.

Quality of Light

The SYLVANIA ULTRA LED RT8 provides excellent color rendering (up to 90 CRI), and a wide selection of color temperatures (3000K, 3500K, 4000K, 5000K). LEDs have virtually no UV or infrared radiation to damage or fade furnishings, art or other objects.

Optical Design

Optical design efficiently directs light output in an 80° beam angle with low glare.

Key Features & Benefits

- 0-10V Dimmable Lumen Packages:
  2000 lumens @24W (120/277V)
  3000 lumens @40W (120/277V)
  5000 lumens @54W (120/277V)
  8000 lumens @92W (120/277V)
- Non-Dimmable Lumen Packages:
  2000 lumens @23W (347V)
  5000 lumens @50W (347V)
- Replacement for 32W and 42W CFL pin base lamps
- Fits in standard 8" CFL mounting frame
- CCT: 3000K, 3500K, 4000K, 5000K (see offerings below)
- CRI of up to 90
- 50,000 hour life (L_{70})
- Suitable for dry, damp and wet locations
- UL1598 Listed and Classified for stand-alone and retrofit applications
- Reduces energy consumption up to 50%
- 120-277V or 347V input voltage
- Lasts up to 3 times longer than CFL pin base lamps
- No warm-up time, instant-on with full light output and stable lamp to lamp color
- Integrated white trim, white baffle reflector and metal conduit adaptor (included) for direct replacement
- Suitable for use in 10" applications using optional trim extender accessory
- Conduit attached for easy installation
- 8000lm product has a remote driver

Product Offering

Ordering Abbreviation	Wattage	Color Temperature	CRI
LED/RT8/2000	24	3000K, 3500K, 4000K	82
LED/RT8/2000-347V	23	3000K, 4000K, 5000K	82
LED/RT8/3000	40	3000K, 3500K, 4000K	90
LED/RT8/5000	54	3000K, 3500K, 4000K	82
LED/RT8/8000	92	3000K, 3500K, 4000K	82
LED/RT8/5000-347V	50	4000K	82

Application Information

Applications

- Healthcare
- Hospitality
- Office
- Property Management
- Residential
- Retail

Specifications and Certifications

RoHS compliant · Lead-Free · Hg · ETL Classified · Intertek · FC · ENERGY STAR · lighting facts · 2014 Progress Report Selection

SYLVANIA

Catalog #	Type
Project/Job	
SYLVANIA Lamp	
SYLVANIA Ballast	
Prepared by	

Specifications

Energy Data

Minimum Starting Temp: 0°C to -20°C (32°F to -4°F)

EMI/RFI: FCC Title 47 CFR, Part 15, Class B

Sound Rating: <24dBA

Input Voltage: 120-277V & 347V

Power Factor: >0.90

Input Frequency: 60Hz

THD: <20%

Input Power: 23W, 24W, 40W, 50W, 54W, 92W

Maximum Ambient Operating Temperature (Non-Insulated Ceiling): 40°C (104°F)

Lighting Data

Lumen Output: 2000, 3000, 5000, 8000

Lumens per Watt: Up to 100

Color

Correlated Color Temperature (CCT): 3000K, 3500K, 4000K, 5000K

Color Rendering Index (CRI): 82, 90

R9: 15

Product Weight: 2.3 lbs.

Ordering Information

Item Number	Ordering Abbreviation	Input Voltage (V)	Recessed Housing	Replaced CFL Wattage	Nominal Wattage (W)	Delivered Light Output (lm)	LPW	Color Temperature	CRI	Avg. Rated Life (hrs.)*	Dimmable
74466	LED/RT8/2000/830	120-277	8"	2x26W CFL	24	2000	83	3000K	82	50,000	Yes (0-10V Low Voltage)
74467	LED/RT8/2000/835	120-277	8"	2x26W CFL	24	2000	83	3500K	82	50,000	Yes (0-10V Low Voltage)
74468	LED/RT8/2000/840	120-277	8"	2x26W CFL	24	2000	83	4000K	82	50,000	Yes (0-10V Low Voltage)
75397	LED/RT8/2000/830/347V	347	8"	2x26W CFL	23	2000	86	3000K	82	50,000	No
75398	LED/RT8/2000/840/347V	347	8"	2x26W CFL	23	2000	86	4000K	82	50,000	No
75399	LED/RT8/2000/850/347V	347	8"	2x26W CFL	23	2000	86	5000K	82	50,000	No
72625	LED/RT8/3000/930	120-277	8"	2x26W CFL	40	3000	75	3000K	90	50,000	Yes (0-10V Low Voltage)
72626	LED/RT8/3000/935	120-277	8"	2x26W CFL	40	3000	75	3500K	90	50,000	Yes (0-10V Low Voltage)
72628	LED/RT8/3000/940	120-277	8"	2x26W CFL	40	3000	75	4000K	90	50,000	Yes (0-10V Low Voltage)
79740	LED/RT8/5000/830	120-277	8"	2x42W CFL	54	5000	92	3000K	82	50,000	Yes (0-10V Low Voltage)
79741	LED/RT8/5000/835	120-277	8"	2x42W CFL	54	5000	92	3500K	82	50,000	Yes (0-10V Low Voltage)
79742	LED/RT8/5000/840	120-277	8"	2x42W CFL	54	5000	92	4000K	82	50,000	Yes (0-10V Low Voltage)
75435	LED/RT8/5000/840/347V	347	8"	2x42W CFL	50	5000	100	4000K	82	50,000	No
79754	LED/RT8/8000/830	120-277	8"	150W HPS/175W MH	92	8000	87	3000K	82	50,000	Yes (0-10V Low Voltage)
79755	LED/RT8/8000/835	120-277	8"	150W HPS/175W MH	92	8000	87	3500K	82	50,000	Yes (0-10V Low Voltage)
79756	LED/RT8/8000/840	120-277	8"	150W HPS/175W MH	92	8000	87	4000K	82	50,000	Yes (0-10V Low Voltage)

*LED lamp life is defined as the number of hours when 50% of an average group of identical lamps reached 70% of its initial lumens.

Ordering Guide

LED	/	RT8	/	2000	/	8	30	/	347V
LED		Product Name RT8 8 = fits 8" frames		Light Output 2000lm, 3000lm, 5000lm, 8000lm		8 = 80 CRI 9 = 90 CRI	Color Temperature 3000K, 3500K, 4000K, 5000K		Input Voltage 347V

Energy Savings

Basic Product Description	LED Lumens	LED Life	Traditional Lamp Type	Lumens	Life	Watts Saved With RT8	RT8 Energy Savings*	RT8 Life Benefit
RT8 24W	2000	50,000	Compact Fluorescent	2400	16,000	Up to 15	$82.50	3X
RT8 23W	2000	50,000	Compact Fluorescent	2400	16,000	Up to 19	$104.50	3X
RT8 40W	3000	50,000	Compact Fluorescent	2400	16,000	Up to 24	$132.00	3X
RT8 54W	5000	50,000	Compact Fluorescent	2400	16,000	Up to 30	$165.00	3X
RT8 92W	8000	50,000	Compact Fluorescent	2400	16,000	Up to 41	$225.00	3X

* Based on $0.11/kWh over 50,000 hours life.

Accessories

RT8 Trim	
75092	RT8TRIMALZAK (white trim and aluminum inner trim)
75093	RT8TRIMSN
Trim Ring Extender	
75083	RT8/10/TRIMEXT
74991	RT8/12/TRIMEXT
Rough In Frame	
71709	LED/RT8/FRAME

Alzak 75092

Satin 75093

75083/74991

71709

Assembly Diagram

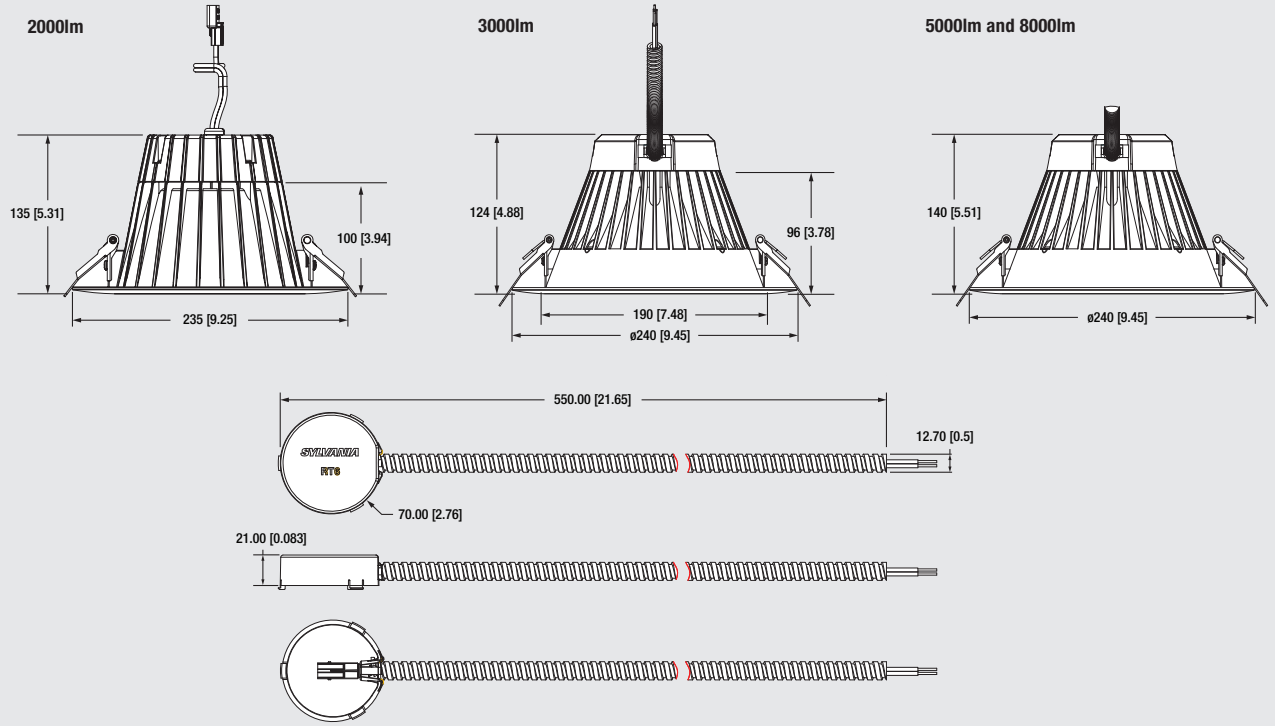

Trim Ring Extenders

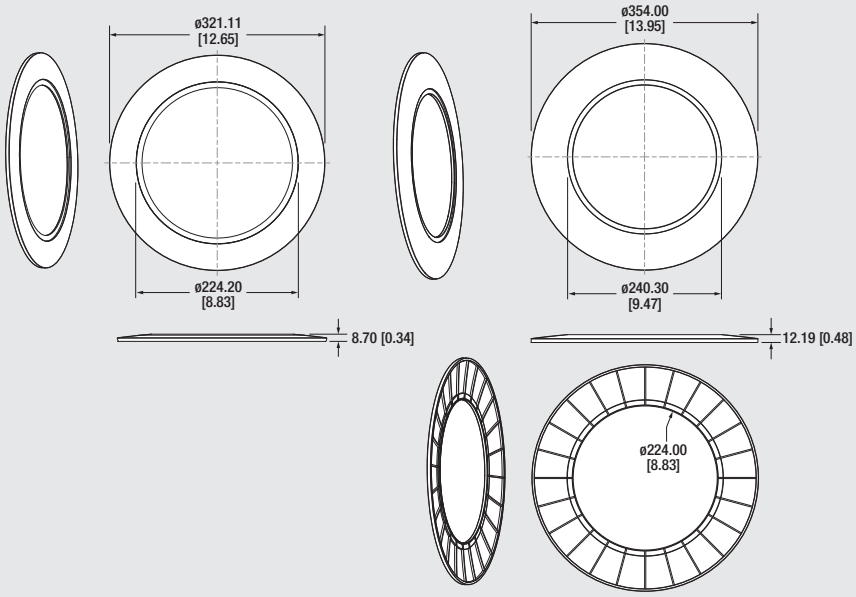

Dimensions are in mm [in]

Photometric Information

RT8 2000lm

Polar Chart

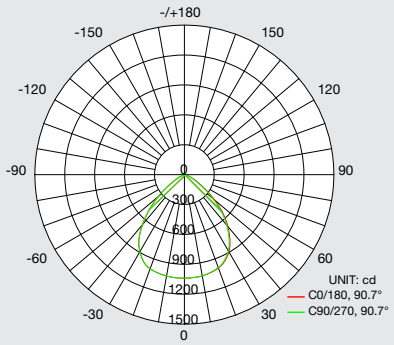

AVERAGE BEAM ANGLE (50%): 90.7°

Zonal Lumen Distribution

Zone	Lumens	% Retrofit Kit
0-20	384	19
0-30	822	41
0-40	1312	65
0-60	1943	97
0-80	2090	104
0-90	2106	105
10-90	2008	100
20-40	927	46
20-50	1330	66
40-70	734	3
60-80	146	67
70-80	43	2
80-90	16	0
0-180	2106	105

Illuminance at Distance

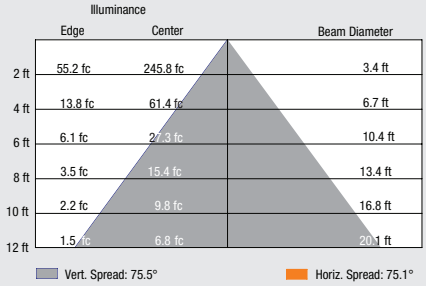

Spacing to Mounting Height Ratio

Spacing Criteria (0-180°)	1.16
Spacing Criteria (90-270°)	1.16
Spacing Criteria (Diagonal)	1.24

RT8 3000lm

Polar Chart

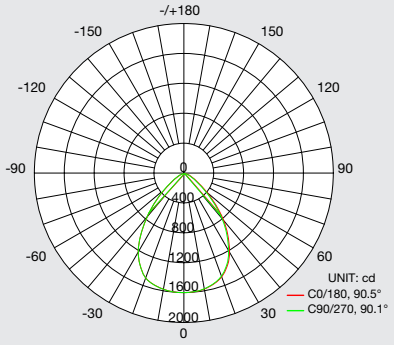

AVERAGE BEAM ANGLE (50%): 90.3°

Zonal Lumen Distribution

Zone	Lumens	% Retrofit Kit
0-20	576	17
0-30	1189	35
0-40	1871	56
0-60	2945	88
0-80	3289	98
0-90	3310	99
10-90	3159	95
20-40	1294	38
20-50	1916	57
40-70	1326	39
60-80	343	10
70-80	92	2
80-90	21	0.7
0-180	3326	100

Illuminance at Distance

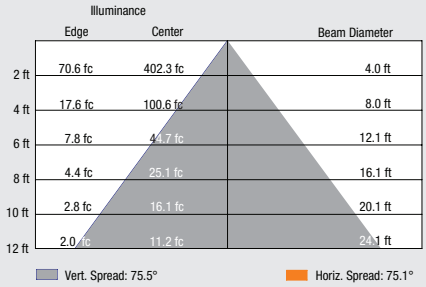

Spacing to Mounting Height Ratio

Spacing Criteria (0-180°)	1.14
Spacing Criteria (90-270°)	1.16
Spacing Criteria (Diagonal)	1.24

RT8 5000lm

Polar Chart

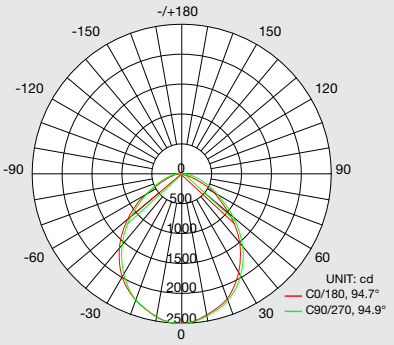

AVERAGE BEAM ANGLE (50%): 94.8°

Zonal Lumen Distribution

Zone	Lumens	% Retrofit Kit
0-20	930	16
0-30	1928	34
0-40	3061	54
0-60	4979	88
0-80	5618	99
0-90	5651	100
10-90	5407	95
20-40	2130	37
20-50	3211	56
40-70	2399	42
60-80	639	11
70-80	158	2
80-90	32	0.6
0-180	5651	100

Illuminance at Distance

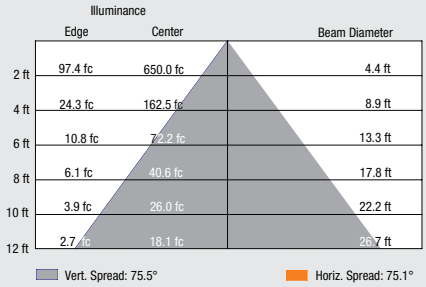

Spacing to Mounting Height Ratio

Spacing Criteria (0-180°)	1.16
Spacing Criteria (90-270°)	1.16
Spacing Criteria (Diagonal)	1.26

RT8 8000lm

Polar Chart

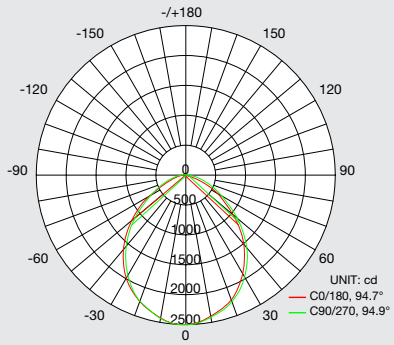

AVERAGE BEAM ANGLE (50%): 94.8°

Zonal Lumen Distribution

Zone	Lumens	% Retrofit Kit
0-20	1859	19
0-30	3843	39
0-40	5946	61
0-60	8593	88
0-80	9500	97
0-90	9594	98
10-90	9103	93
20-40	4086	42
20-50	5741	59
40-70	3226	33
60-80	906	9
70-80	327	3
80-90	94	1
0-180	9735	100

Illuminance at Distance

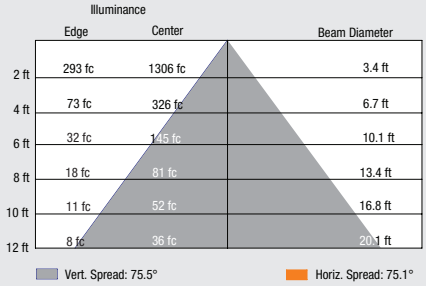

Spacing to Mounting Height Ratio

Spacing Criteria (0-180°)	1.16
Spacing Criteria (90-270°)	1.16
Spacing Criteria (Diagonal)	1.26

Application Information

Application Notes

1. Operating temperature range between -4°F and +104°F (-20°C and +40°C).
2. Suitable for indoor/outdoor use, including dry, damp and wet location environments.
3. Designed to install in standard 8" CFL mounting frame. For a list of compatible housings, please refer to www.sylvania.com/RT8.
4. For detailed warranty information, please see www.sylvania.com/RT8.
5. For installation in non-insulated ceilings: If insulation is present, it may be placed around the retrofit kit as long as a three-inch space is maintained around the kit.
6. Installation performed as a stand-alone kit (without frame) is recommended for hard ceiling. Installation of a recessed incandescent frame is recommended for tiled ceiling application for proper support of the retrofit kit.
7. Compatible with Philips Bodine model ELI-S-20 and IOTA model IIS-125 Emergency Lighting Inverters.

LEDVANCE LLC
200 Ballardvale Street
Wilmington, MA 01887 USA
Phone 1-800-LIGHTBULB (1-800-544-4828)
www.sylvania.com

SYLVANIA and LEDVANCE are registered trademarks.
All other trademarks are those of their respective owners.
Licensee of product trademark SYLVANIA in general lighting.
Specifications subject to change without notice.

/sylvania /sylvania

© 2019 LEDVANCE LLC

SYLVANIA Luminaires

UltraLED™ RT

Recessed Downlight

Item #	
Type	
Project	
Notes	
Date	

Application

SYLVANIA UltraLED RT is a universal input voltage 5", 6" and 8" compatible LED recessed downlight kit that creates high performing white light and is optimized for new construction and retrofit applications utilizing pin-based compact fluorescent lamps. Installation is done quickly and easily in most standard six-inch and eight-inch frames. The SYLVANIA UltraLED RT series is designed to seamlessly integrate with SYLVANIA field-installable, integrated emergency battery back-up drivers.

Benefits and Features

- 85° beam angle
- Battery back-up ready connection increases the ease of installation
- High CRI (>90) ensures a high quality light
- Up to 94 LPW
- Offered in 700lm (9W), 900lm (12W), 1500lm (17W), 2000lm (23W), 3000lm (32W), 5000lm (57W) versions
- Energy savings up to 56%
- 12V Aux for seamless integration with advanced controls (RT 3B only)

Electrical

- Designed to operate at 120VAC or 120-277VAC (see ordering information for further details)
- Power Factor >.9
- THD <20%
- Phase-cut dimmable for RT5/6 700lm, 0-10V dimmable for all other versions

Rated Life

- ≥50,000 hours (L_{70}) @25°C

Warranty

- 5-year standard warranty

Ambient Operating Range

- -4°F to +104°F (-20°C to +40°C)

Wattage Comparison

Traditional Source	LED System Wattage	Energy Savings
13W CFL	9W	31%
18W CFL	12W	33%
32W CFL	17W	47%
2x26W CFL	23W	56%
2x32W CFL	32W	50%
2x42W CFL	57W	32%

Certifications and Listings

- cETLus
- RoHS
- FCC
- ENERGY STAR®
- Classified for stand-alone and retrofit applications as per UL 1598/1598C
- RT5/6, RT6 and RT8 2000 lumens are IC rated for direct contact with insulation. Allows for installation without a housing
- Certified airtight as per ASTM E283-04
- Suitable for dry, damp, and wet locations

Installation

- Installation performed as a stand-alone kit is recommended for hard ceilings. Installation of a recessed incandescent frame is recommended for tiled ceiling application.

Ordering Guide

LEDRT	XX	/	R	XX	XXXX	X	X	/	9	XX
LEDRT = LED Downlights	Size 5/6 = 5/6" compatible can 6 = 6" compatible can 8 = 8" compatible can		Shape R = Round	Generation 3A = EMBB Ready 3B = IoT Ready	Lumens output 700 = 700lm 900 = 900lm 1500 = 1500lm 2000 = 2000lm 3000 = 3000lm 5000 = 5000lm	Voltage U = 120-277V S = 120V	Dimming D = 0-10V T = Phase-Cut		CRI 9 = >90	27 = 2700K 30 = 3000K 35 = 3500K 40 = 4000K 50 = 5000K

Ordering Information

Item Number	Ordering Abbreviation	Power (W)	Input Voltage	Dimming	CRI	Color Temp (CCT)	Total Fixture Lumens	ENERGY STAR Listed	LPW	Options
60765	LEDRT56/R3A700ST/927	9	120V	Phase-Cut	90	2700K	700	Yes	78	EMBB Ready
60766	LEDRT56/R3A700ST/930	9	120V	Phase-Cut	90	3000K	700	Yes	78	EMBB Ready
60767	LEDRT56/R3A700ST/935	9	120V	Phase-Cut	90	3500K	700	Yes	78	EMBB Ready
60768	LEDRT56/R3A700ST/940	9	120V	Phase-Cut	90	4000K	700	Yes	78	EMBB Ready
60769	LEDRT56/R3A700ST/950	9	120V	Phase-Cut	90	5000K	700	Yes	78	EMBB Ready
61446	LEDRT56/R3A700UD/927	9	120-277V	0-10V	90	2700K	700	Yes	77	EMBB Ready
61447	LEDRT56/R3A700UD/930	9	120-277V	0-10V	90	3000K	700	Yes	77	EMBB Ready
61448	LEDRT56/R3A700UD/935	9	120-277V	0-10V	90	3500K	700	Yes	77	EMBB Ready
61449	LEDRT56/R3A700UD/940	9	120-277V	0-10V	90	4000K	700	Yes	77	EMBB Ready
61450	LEDRT56/R3A700UD/950	9	120-277V	0-10V	90	5000K	700	Yes	77	EMBB Ready
60770	LEDRT56/R3A900UD/927	12	120-277V	0-10V	90	2700K	900	Yes	75	EMBB Ready
60771	LEDRT56/R3A900UD/930	12	120-277V	0-10V	90	3000K	900	Yes	75	EMBB Ready
60772	LEDRT56/R3A900UD/935	12	120-277V	0-10V	90	3500K	900	Yes	75	EMBB Ready
60773	LEDRT56/R3A900UD/940	12	120-277V	0-10V	90	4000K	900	Yes	75	EMBB Ready
60774	LEDRT56/R3A900UD/950	12	120-277V	0-10V	90	5000K	900	Yes	75	EMBB Ready
60775	LEDRT6/R3A1500UD/930	17	120-277V	0-10V	90	3000K	1500	Yes	88	EMBB Ready
60776	LEDRT6/R3A1500UD/935	17	120-277V	0-10V	90	3500K	1500	Yes	88	EMBB Ready
60777	LEDRT6/R3A1500UD/940	17	120-277V	0-10V	90	4000K	1500	Yes	88	EMBB Ready
60778	LEDRT6/R3A1500UD/950	17	120-277V	0-10V	90	5000K	1500	Yes	88	EMBB Ready
60779	LEDRT8/R3A2000UD/930	23	120-277V	0-10V	90	3000K	2000	Yes	87	EMBB Ready
60780	LEDRT8/R3A2000UD/935	23	120-277V	0-10V	90	3500K	2000	Yes	87	EMBB Ready
60781	LEDRT8/R3A2000UD/940	23	120-277V	0-10V	90	4000K	2000	Yes	87	EMBB Ready
60782	LEDRT8/R3A2000UD/950	23	120-277V	0-10V	90	5000K	2000	Yes	87	EMBB Ready
60783	LEDRT8/R3A3000UD/930	32	120-277V	0-10V	90	3000K	3000	Yes	94	EMBB Ready
60784	LEDRT8/R3A3000UD/935	32	120-277V	0-10V	90	3500K	3000	Yes	94	EMBB Ready
60785	LEDRT8/R3A3000UD/940	32	120-277V	0-10V	90	4000K	3000	Yes	94	EMBB Ready
60786	LEDRT8/R3A3000UD/950	32	120-277V	0-10V	90	5000K	3000	Yes	94	EMBB Ready
60787	LEDRT8/R3A5000UD/930	57	120-277V	0-10V	90	3000K	5000	Yes	93	EMBB Ready
60788	LEDRT8/R3A5000UD/935	57	120-277V	0-10V	90	3500K	5000	Yes	93	EMBB Ready
60789	LEDRT8/R3A5000UD/940	57	120-277V	0-10V	90	4000K	5000	Yes	93	EMBB Ready
61495	LEDRT56/R3B700UD/927	9	120-277V	0-10V	90	2700K	700	Yes	77	IoT Ready
61496	LEDRT56/R3B700UD/930	9	120-277V	0-10V	90	3000K	700	Yes	77	IoT Ready
61497	LEDRT56/R3B700UD/935	9	120-277V	0-10V	90	3500K	700	Yes	77	IoT Ready
61498	LEDRT56/R3B700UD/940	9	120-277V	0-10V	90	4000K	700	Yes	77	IoT Ready
61499	LEDRT56/R3B700UD/950	9	120-277V	0-10V	90	5000K	700	Yes	77	IoT Ready
61524	LEDRT56/R3B900UD/930	12	120-277V	0-10V	90	3000K	900	Yes	75	IoT Ready
61501	LEDRT56/R3B900UD/935	12	120-277V	0-10V	90	3500K	900	Yes	75	IoT Ready
61502	LEDRT56/R3B900UD/940	12	120-277V	0-10V	90	4000K	900	Yes	75	IoT Ready
61503	LEDRT56/R3B900UD/950	12	120-277V	0-10V	90	5000K	900	Yes	75	IoT Ready
61504	LEDRT6/R3B1500UD/930	17	120-277V	0-10V	90	3000K	1500	Yes	88	IoT Ready
61505	LEDRT6/R3B1500UD/935	17	120-277V	0-10V	90	3500K	1500	Yes	88	IoT Ready
61506	LEDRT6/R3B1500UD/940	17	120-277V	0-10V	90	4000K	1500	Yes	88	IoT Ready
61507	LEDRT6/R3B1500UD/950	17	120-277V	0-10V	90	5000K	1500	Yes	88	IoT Ready
61508	LEDRT8/R3B2000UD/930	23	120-277V	0-10V	90	3000K	2000	Yes	86	IoT Ready
61509	LEDRT8/R3B2000UD/935	23	120-277V	0-10V	90	3500K	2000	Yes	86	IoT Ready
61510	LEDRT8/R3B2000UD/940	23	120-277V	0-10V	90	4000K	2000	Yes	86	IoT Ready
61511	LEDRT8/R3B2000UD/950	23	120-277V	0-10V	90	5000K	2000	Yes	86	IoT Ready

Photometric Data

700lm

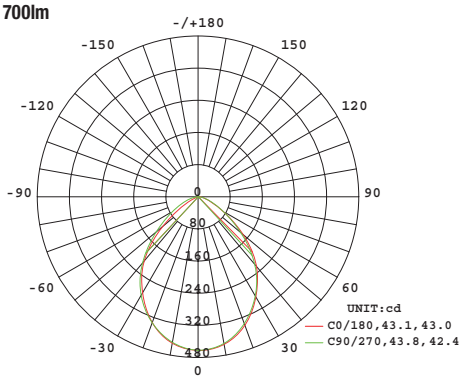

AVERAGE BEAM ANGLE(50%):86.1 DEG

900lm

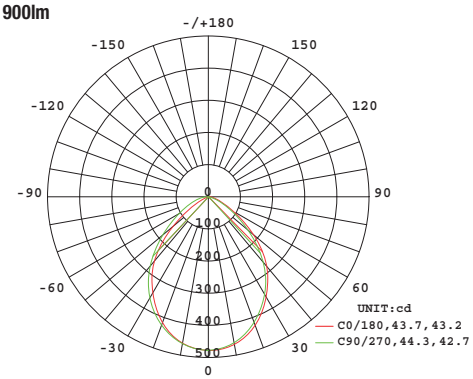

AVERAGE BEAM ANGLE(50%):86.9 DEG

1500lm

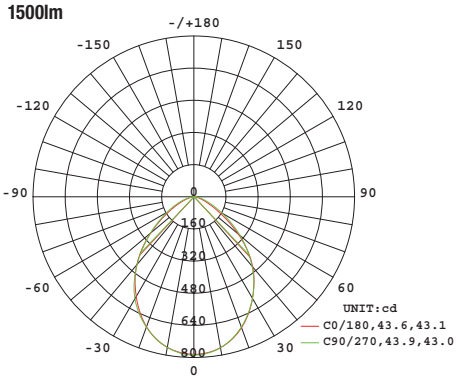

AVERAGE BEAM ANGLE(50%):86.8 DEG

2000lm

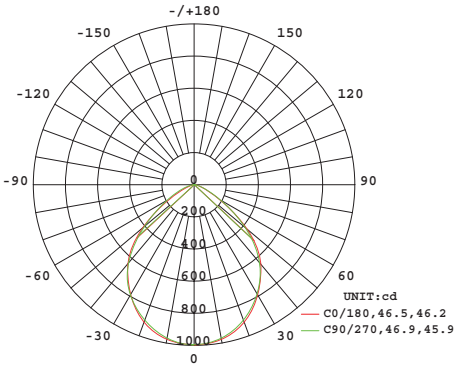

AVERAGE BEAM ANGLE(50%):92.7 DEG

3000lm

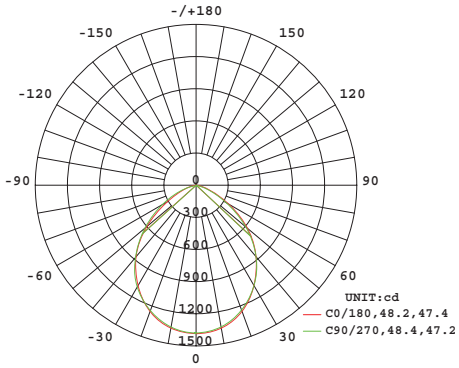

AVERAGE BEAM ANGLE(50%):95.6 DEG

5000lm

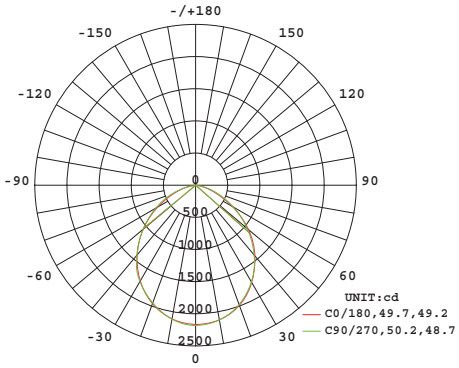

AVERAGE BEAM ANGLE(50%):98.9 DEG

Physical Information

700lm & 900lm

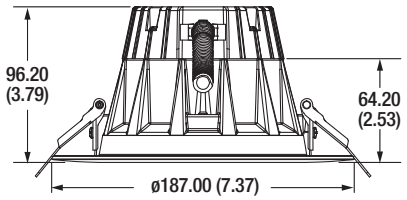

700lm & 900lm w/J-box

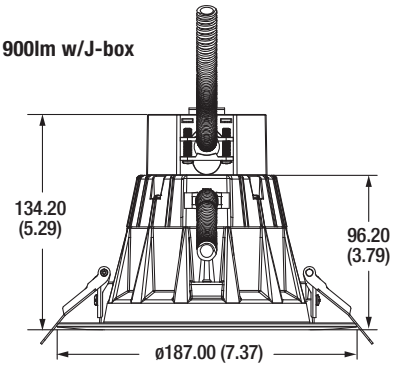

1500lm

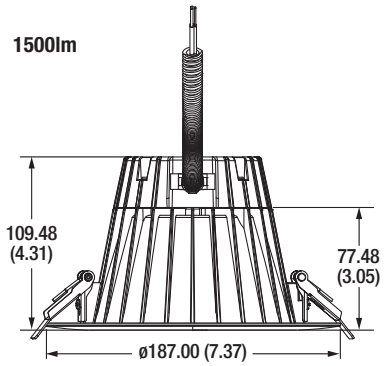

1500lm w/J-box

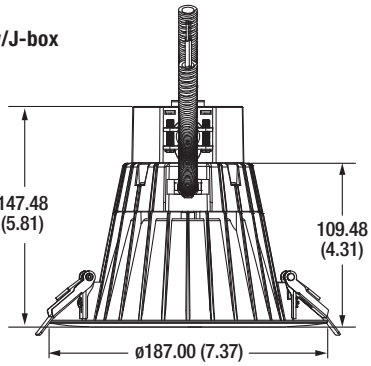

2000lm

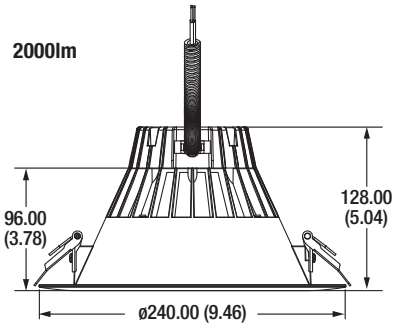

2000lm w/J-box

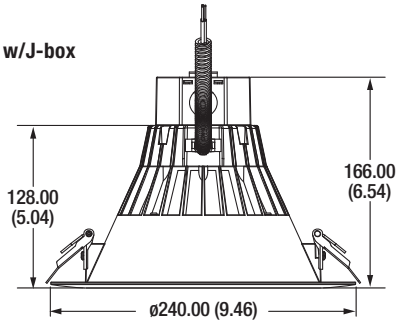

3000lm

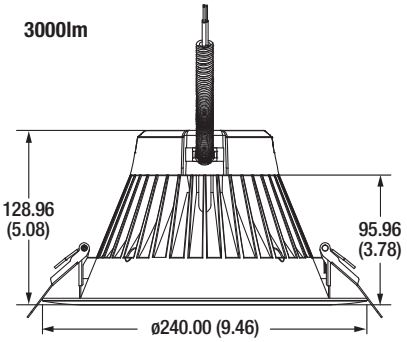

3000lm w/J-box

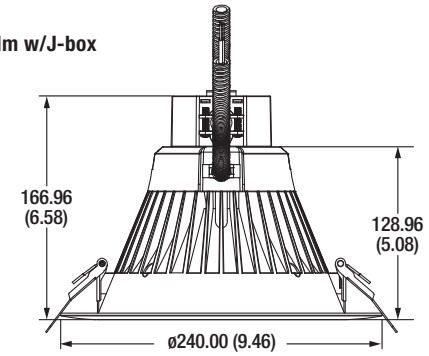

5000lm

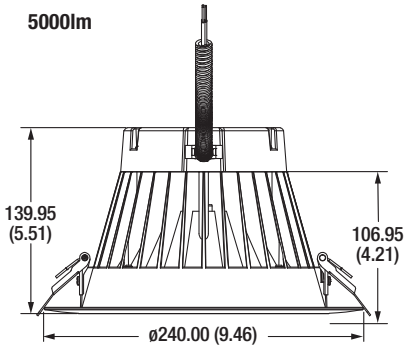

5000lm w/J-box

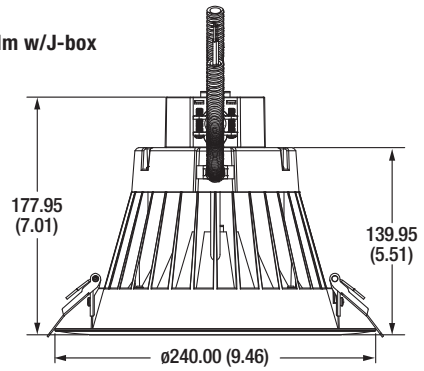

Dimensions in mm (in)

Accessories

RT5/6 Retrofit Trim		
75095	RT/5/6/TRIM/DKBZ	Dark bronze trim ring
75097	RT/5/6/TRIM/BLK	Black trim ring
75098	RT/5/6/TRIM/ORBZ	Bronze trim ring
75099	RT/5/6/TRIM/SN	Satin nickel trim ring
RT5/6 Trim Ring Extender		
75082	RT6/8/TRIMEXT	Trim extender for 8" cans
RT5/6 Rough In Frame		
71708	LED/RT6HO/FRAME	6" recessed rough-in frame
RT8 Trim Ring Extender		
75083	RT8/10/TRIMEXT	Trim extender for 10" cans
74991	RT8/12/TRIMEXT	Trim extender for 12" cans
RT8 Rough In Frame		
71709	LED/RT8/FRAME	8" recessed rough-in frame

75097 75098 75099

75082

71708

75083/74991

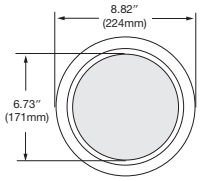

RT8 Trim Ring Extenders

RT8/10

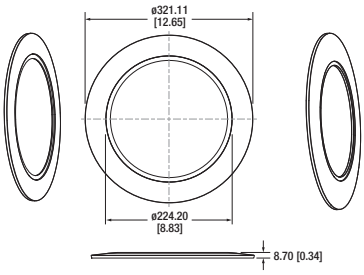

RT8/12

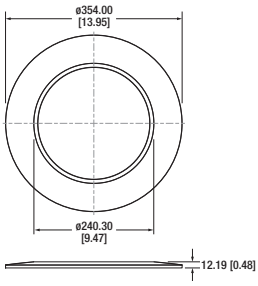

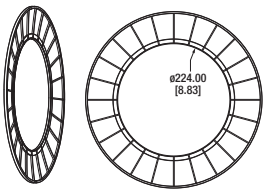

Measurements are in mm [in]

Junction Box		
60891	ACC/RT/EMBB-J-BOX	Junction box for RT Emergency Battery Back-up (8 per SKU)

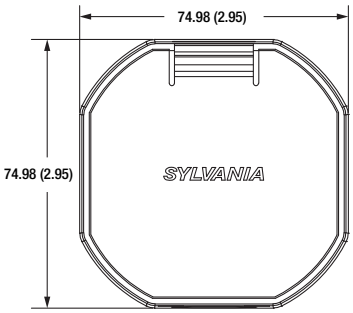

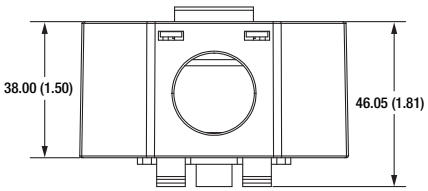

Dimensions in mm (in.)

Control Options/Connected Lighting Module (CLM)		
58050	ZBHA-CLM-DIM	Open Zigbee
45678	ZBHA-CLM-DIM-ENC	Encelium

58050/45678

Emergency Battery Back-Up Accessories

Emergency Battery Back-Up Specs

NAED	Description	Input Voltage	Frequency	Input Current	Watt Hours	Max Mounting Height	Ambient Temp	Charging Time	Rating	Warranty
60887	EMBB1A5WDC	120-277VAC	50/60 Hz	100mA Max.	9.6wH	22.63ft	0-50°C	24 hours	Damp	4 years
60888	EMBB1A8WDC	120-277VAC	50/60 Hz	100mA Max.	14.4wH	22.26ft	0-50°C	24 hours	Damp	4 years
60889	EMBB1A16WDC	120-277VAC	50/60 Hz	100mA Max.	28.8wH	22.13ft	0-50°C	32 hours	Damp	4 years

Compatibility Table

RT	EMBB	Current (mA)	RT Lumens	Duration
LEDRT5/6R3A700ST9XX	EMBB1A5WDC	100	350	90 mins
LEDRT5/6R3A900UD9XX	EMBB1A5WDC	100	350	
	EMBB1A8WDC	150	500	
LEDRT6R3A1500UD9XX	EMBB1A8WDC	150	550	
		200	700	
LEDRT8R3A2000UD9XX	EMBB1A8WDC	150	550	
		200	700	
LEDRT8R3A3000UD9XX	EMBB1A8WDC	200	750	
	EMBB1A16WDC	300	1200	
LEDRT8R3A5000UD9XX	EMBB1A8WDC	200	750	
	EMBB1A16WDC	300	1200	

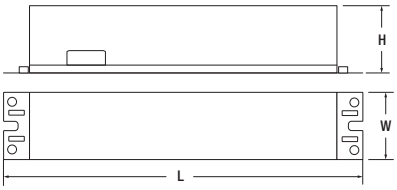

Dimensions	Length (mm)
H	55.5
W	55
L	256

LEDVANCE LLC
200 Ballardvale Street
Wilmington, MA 01887 USA
Phone 1-800-LIGHTBULB (1-800-544-4828)
www.sylvania.com

SYLVANIA and LEDVANCE are registered trademarks.
All other trademarks are those of their respective owners.
Licensee of product trademark SYLVANIA in general lighting.
Specifications subject to change without notice.

/sylvania /sylvania

Name:
Email:
Phone:

© 2020 LEDVANCE LLC

SYLVANIA Luminaires

UltraLED™ Selectable Downlights

Item #	
Type	
Project	
Notes	
Date	

Application

The SYLVANIA UltraLED Selectable Downlights are offered in 5/6", 6", and 8" sizes and provide high performing light optimized for both new construction and retrofit applications where pin based compact fluorescent lamps have previously been used. The installation is done quickly and easily in most standard frames. The lumen and CCT selectable switches allow for customizable light replacing up to two 26W compact fluorescent lamps and offering up to 52% energy savings when compared to traditional technologies.

Benefits and Features

- Lumen and CCT selectable light enabled through the two switches located on the base of the product
- This product is available in lumen selectable only versions – enabled through the one switch located on the base of the product
- 0-10V dimmable
- ENERGY STAR® listed to maximize rebate opportunities
- Available in 5/6", 6" (lumen and lumen and CCT versions), and 8" sizes (lumen selectable versions only)
- Up to 83 LPW
- 2700K, 3000K, 3500K, 4000K, and 5000K and selectable K color temperature
- CRI >90
- Offered in 9 or 12 watt, 14.5 or 18 watt, and 17 or 25 watt versions
- Energy savings up to 52%

Electrical

- 120-277VAC
- Power Factor >90%
- THD <20%
- 0-10V dimmable

Rated Life

- 50,000 hours (L_{70})

Warranty

- 5-year (please see LEDLUM001)

Ambient Operating Range

- -4°F to +104°F (-20°C to +40°C)

Wattage Comparison

Traditional Source	LED System Wattage	Energy Savings
13 or 18W CFL	9 or 12W	30 or 33%
23 or 32W CFL	14.5 or 18W	37 or 44%
32W or 2x26W CFL	17 or 25W	47 or 52%

Certifications and Listings

- cETLus
- ENERGY STAR
- RoHS
- FCC

Installation

- Installation performed as a stand-alone kit (without frame) is recommended for hard ceiling. Installation of a recessed incandescent frame is recommended for tiled ceiling application for proper support of the retrofit kit.

Ordering Guide

One Switch (Lumen Selectable)

RT	SL	/	XX	R	/	1A	/	XXXXXX	U	/	D	/	9	XX
RT = Retrofit Downlight	SL = Selectable Lumen		Size 56 = 5/6" 6 = 6" 8 = 8"	Shape R = Round		Generation		Light Output 700900 = 700 or 900 lumens 12001500 = 1200 or 1500 lumens 15002000 = 1500 or 2000 lumens	Voltage U = 120-277V		Dimming D = 0-10V		CRI 9 = >90	CCT 27 = 2700K 30 = 3000K 35 = 3500K 40 = 4000K 50 = 5000K

Two Switch (Lumen and CCT Selectable)

RT	SD	/	XX	/	1A	/	XXXX	U	/	D	/	9	303540
RT = Retrofit Downlight	SD = Dual Selectable (Lumen and CCT)		Size 56 = 5/6" 6 = 6"		Generation		Light Output 79 = 700 or 900 lumens 1215 = 1200 or 1500 lumens	Voltage U = 120-277V		Dimming D = 0-10V		CRI 9 = >90	CCT 303540 = 3000K, 3500K or 4000K

Ordering Information

Item Number	Ordering Abbreviation	Power (W)	Input Voltage	Dimming	CRI	Color Temp (CCT)	Total Fixture Lumens	Lumens per Watt	ENERGY STAR® Listed	MTO*
Lumen Selectable Only										
60742	RTSL56R1A700900UD927	9 or 12	120-277	0-10V	90	2700K	700 or 900	75	Yes	
60743	RTSL56R1A700900UD930	9 or 12	120-277	0-10V	90	3000K	700 or 900	75	Yes	
60744	RTSL56R1A700900UD935	9 or 12	120-277	0-10V	90	3500K	700 or 900	75	Yes	
60745	RTSL56R1A700900UD940	9 or 12	120-277	0-10V	90	4000K	700 or 900	75	Yes	
60746	RTSL56R1A700900UD950	9 or 12	120-277	0-10V	90	5000K	700 or 900	75	Yes	MTO
60747	RTSL6R1A12001500UD927	14.5 or 18	120-277	0-10V	90	2700K	1200 or 1500	83	Yes	MTO
60748	RTSL6R1A12001500UD930	14.5 or 18	120-277	0-10V	90	3000K	1200 or 1500	83	Yes	MTO
60749	RTSL6R1A12001500UD935	14.5 or 18	120-277	0-10V	90	3500K	1200 or 1500	83	Yes	
60750	RTSL6R1A12001500UD940	14.5 or 18	120-277	0-10V	90	4000K	1200 or 1500	83	Yes	
60751	RTSL6R1A12001500UD950	14.5 or 18	120-277	0-10V	90	5000K	1200 or 1500	83	Yes	
60752	RTSL8R1A15002000UD927	17 or 25	120-277	0-10V	90	2700K	1500 or 2000	80	Yes	MTO
60753	RTSL8R1A15002000UD930	17 or 25	120-277	0-10V	90	3000K	1500 or 2000	80	Yes	
60754	RTSL8R1A15002000UD935	17 or 25	120-277	0-10V	90	3500K	1500 or 2000	80	Yes	
60755	RTSL8R1A15002000UD940	17 or 25	120-277	0-10V	90	4000K	1500 or 2000	80	Yes	
60756	RTSL8R1A15002000UD950	17 or 25	120-277	0-10V	90	5000K	1500 or 2000	80	Yes	
Lumen and CCT Selectable										
60814	RTSD561A79UD9303540	9 or 12	120-277	0-10V	90	3000, 3500, or 4000K	700 or 900	75	Yes	
60815	RTSD61A1215UD9303540	14.5 or 18	120-277	0-10V	90	3000, 3500, or 4000K	1200 or 1500	83	Yes	

*Made To Order

Photometrics

Luminous Intensity Distribution Diagrams

700/900lm

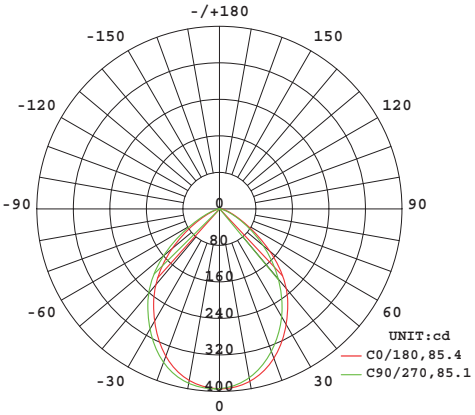

Zonal Lumen Distribution

Zone	Lumens	% Retrofit Kit
0-20	170	18
0-30	350	38
0-40	549	59
0-60	838	91
0-80	919	99
0-90	925	100
10-90	880	95
20-40	379	41
20-50	551	60
40-70	348	38
60-80	81	9
70-80	22	2
80-90	6	1
0-180	925	100

Illuminance at a Distance

Distance to Illuminated Plane (feet)	Footcandles Beam Center	Footcandles Beam Edge	Beam Diameter (feet)
2	119.7 fc	22.9 fc	3.8
4	29.9 fc	5.7 fc	7.6
6	13.3 fc	2.5 fc	11.4
8	7.5 fc	1.4 fc	15.2
10	4.8 fc	0.9 fc	19
12	3.3 fc	0.6 fc	22.8

Spacing to Mounting Height Ratio

Spacing Criterion (0-180)	1.12
Spacing Criterion (90-270)	1.14
Spacing Criterion (Diagonal)	1.22

1500/2000lm One Switch

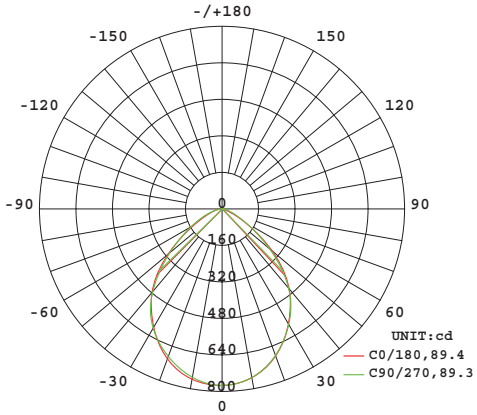

Zonal Lumen Distribution

Zone	Lumens	% Retrofit Kit
0-20	279	18
0-30	572	38
0-40	894	59
0-60	1370	90
0-80	1508	99
0-90	1518	100
10-90	1444	95
20-40	615	41
20-50	897	59
40-70	577	38
60-80	138	9
70-80	37	2
80-90	10	1
0-180	1518	100

Illuminance at a Distance

Distance to Illuminated Plane (feet)	Footcandles Beam Center	Footcandles Beam Edge	Beam Diameter (feet)
2	196.6 fc	38 fc	3.8
4	49.2 fc	9.5 fc	7.5
6	21.8 fc	4.2 fc	11.3
8	12.3 fc	2.4 fc	15.1
10	7.9 fc	1.5 fc	18.8
12	5.5 fc	1.1 fc	22.6

Spacing to Mounting Height Ratio

Spacing Criterion (0-180)	1.12
Spacing Criterion (90-270)	1.14
Spacing Criterion (Diagonal)	1.2

1200/1500lm Two Switch

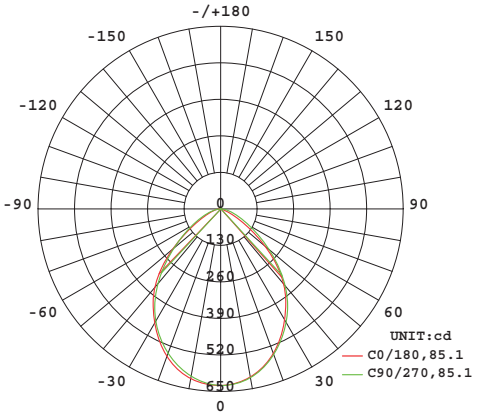

Zonal Lumen Distribution

Zone	Lumens	% Retrofit Kit
0-20	360	18
0-30	749	37
0-40	1198	59
0-60	1857	91
0-80	2020	99
0-90	2034	100
10-90	1940	95
20-40	838	41
20-50	1242	61
40-70	772	38
60-80	163	8
70-80	50	3
80-90	14	1
0-180	2034	100

Illuminance at a Distance

Distance to Illuminated Plane (feet)	Footcandles Beam Center	Footcandles Beam Edge	Beam Diameter (feet)
2	250.5 fc	42 fc	4.1
4	62.6 fc	10.5 fc	8.3
6	27.8 fc	4.7 fc	12.4
8	15.7 fc	2.6 fc	16.6
10	10 fc	1.7 fc	20.7
12	7 fc	1.2 fc	24.9

Spacing to Mounting Height Ratio

Spacing Criterion (0-180)	1.18
Spacing Criterion (90-270)	1.2
Spacing Criterion (Diagonal)	1.26

Physical Information

RT6 700-900 One Switch

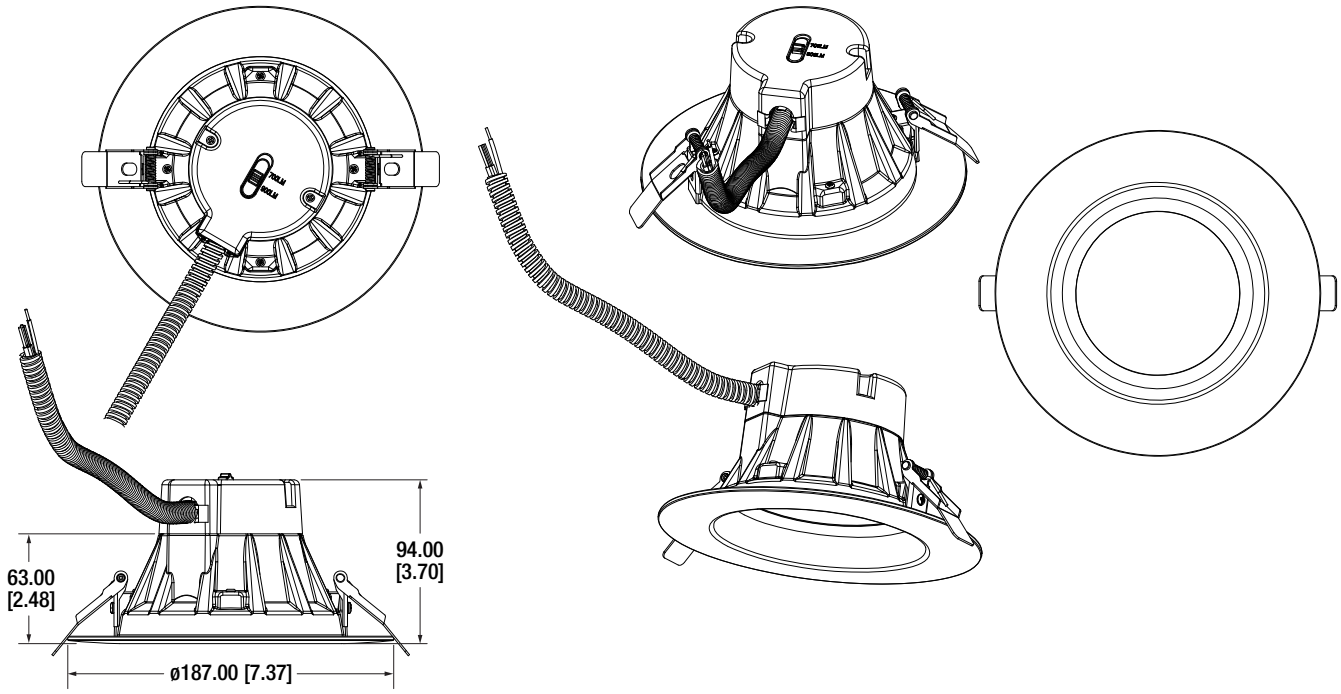

RT6 700-900 Two Switch

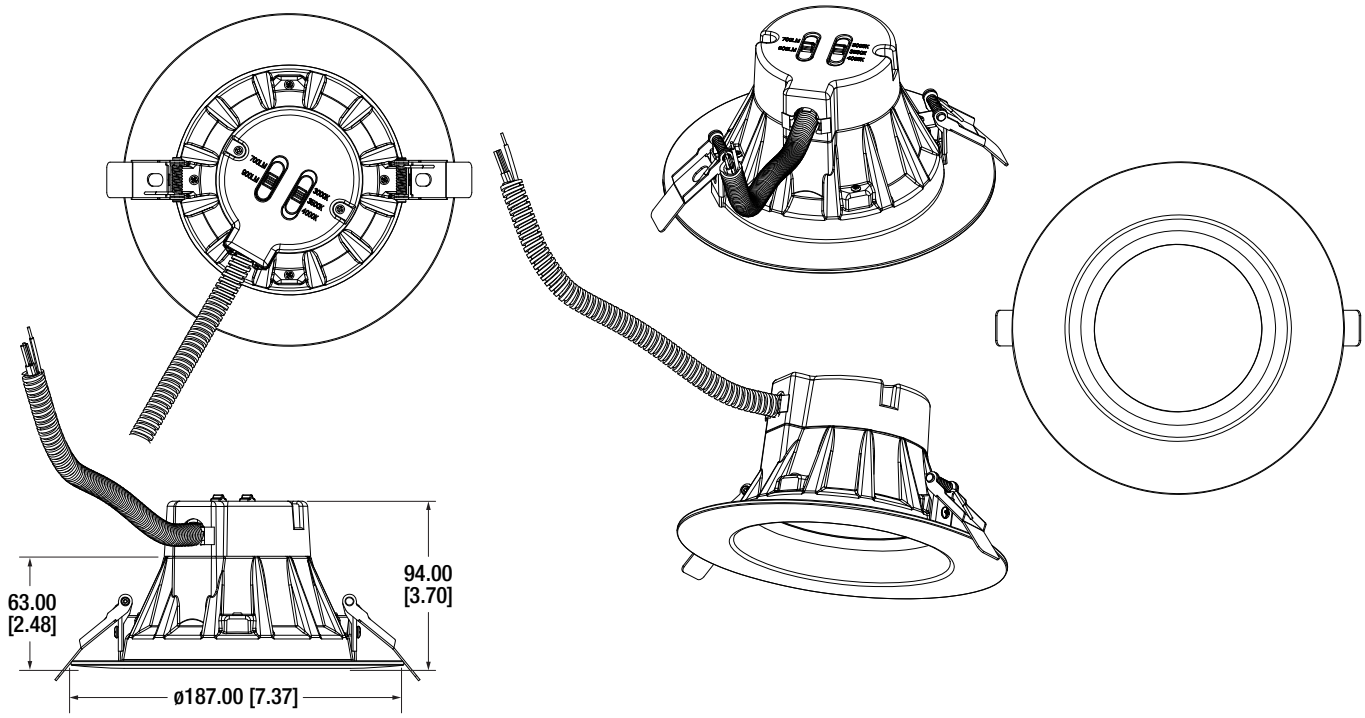

Physical Information (continued)

RT6 1200-1500 One Switch

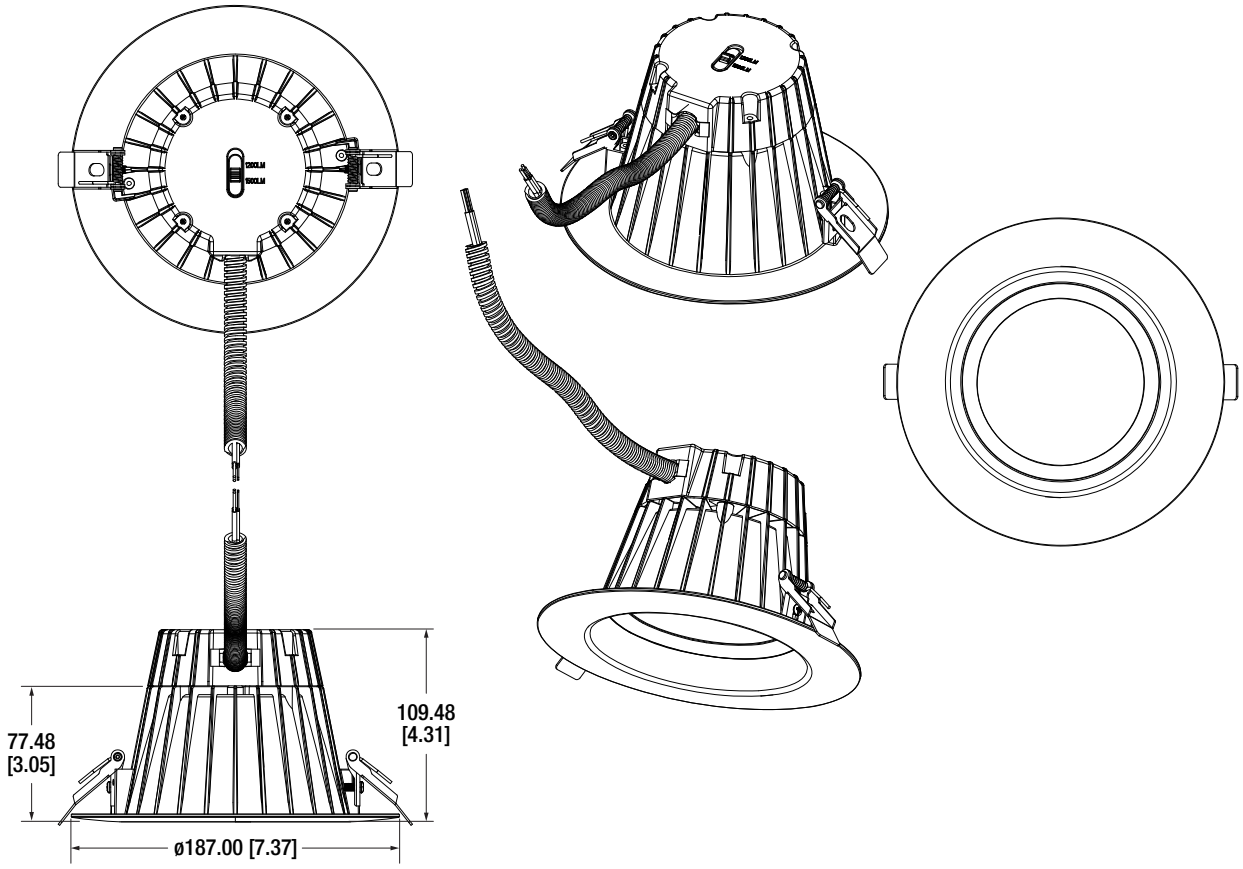

RT6 1200-1500 Two Switch

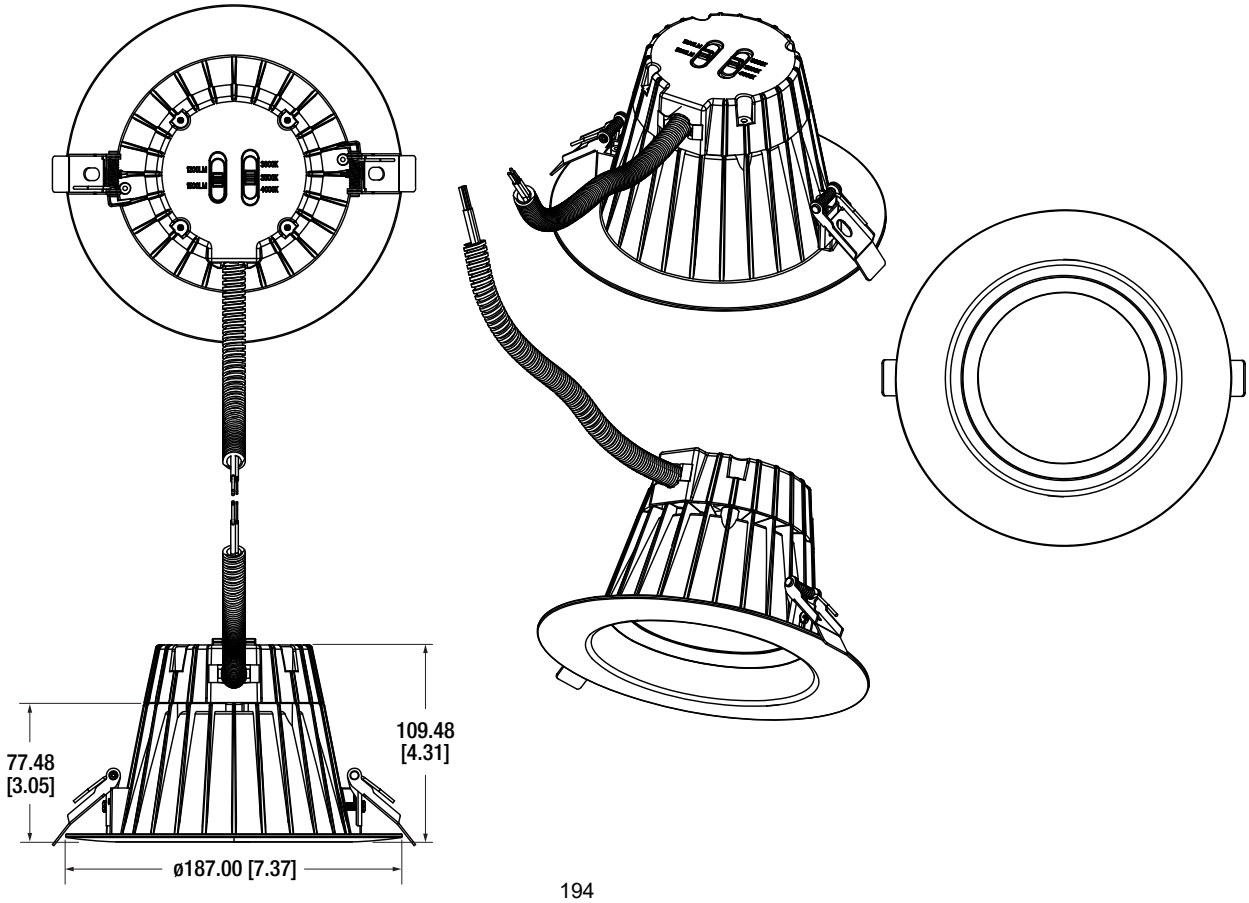

Physical Information (continued)

RT6 1500-2000 One Switch

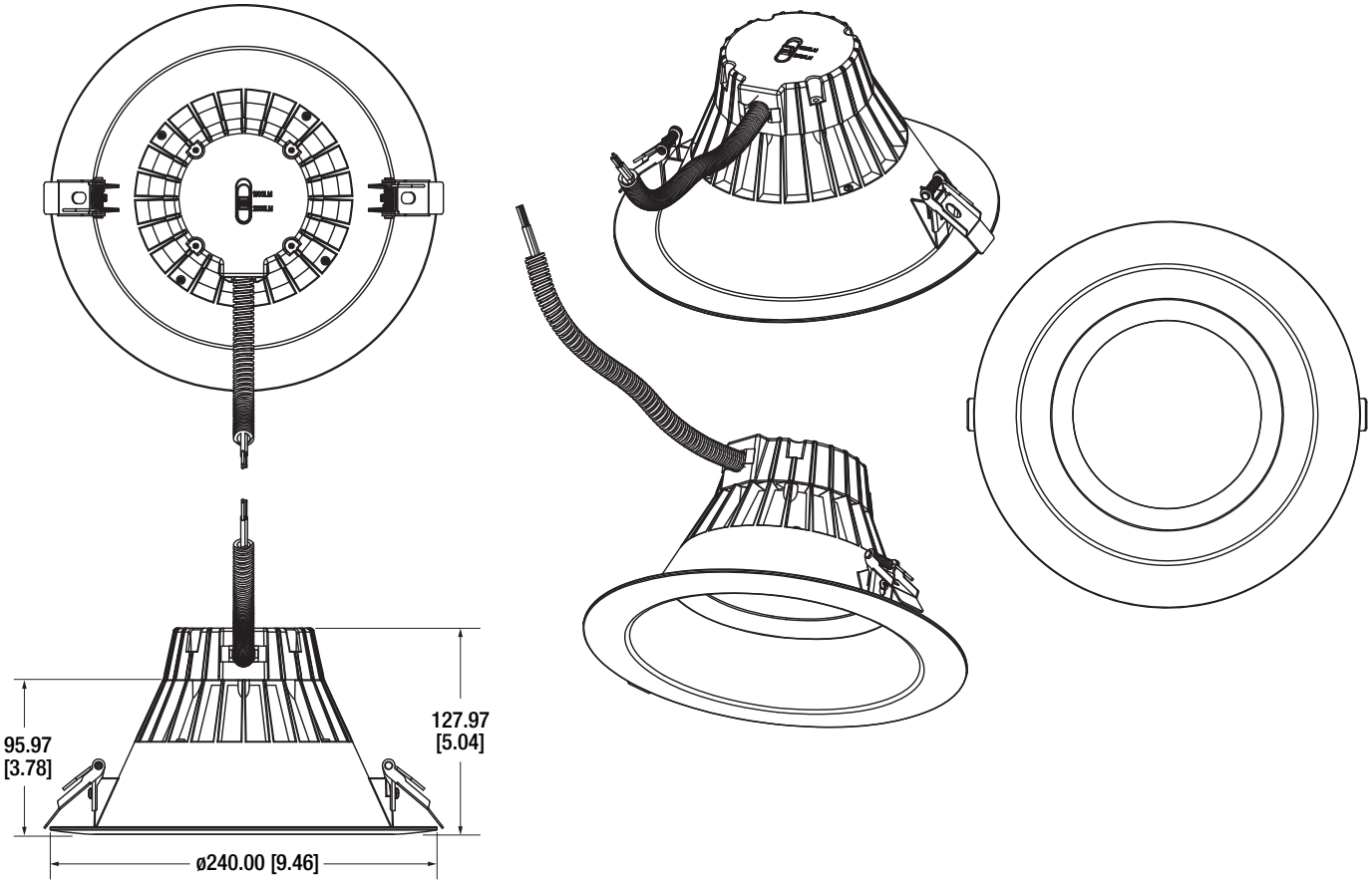

Accessories

Item Number	Ordering Abbreviation	Item Decsription
Trim Rings		
75095	RT/5/6/TRIM/DKBZ	Dark bronze trim ring (5/6")
75097	RT/5/6/TRIM/BLK	Black trim ring (5/6")
75098	RT/5/6/TRIM/ORBZ	Bronze trim ring (5/6")
75099	RT/5/6/TRIM/SN	Satin nickel trim ring (5/6")
Trim Ring Extender		
75082	RT6/8/TRIMEXT	Trim extender for 8" cans
Rough In Frame		
71708	LED/RT6HO/FRAME	6" recessed rough-in frame

75095

75097

75098

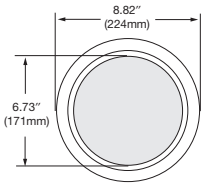

75099 and 75093

75082

71708

Additional Specifications

- Compatible with 0-10V Dimmers.
- Suitable for dry, damp, and wet indoor or outdoor locations.
- Not intended for use with emergency light fixtures or exit lights.
- Standard 5-year luminaire warranty (LEDLUM001).

LEDVANCE LLC
200 Ballardvale Street
Wilmington, MA 01887 USA
Phone 1-800-LIGHTBULB (1-800-544-4828)
www.sylvania.com

SYLVANIA and LEDVANCE are registered trademarks.
All other trademarks are those of their respective owners.
Licensee of product trademark SYLVANIA in general lighting.
Specifications subject to change without notice.

/sylvania /sylvania

Name:

Email:

Phone:

© 2019 LEDVANCE LLC

SYLVANIA Luminaires

Hi-PerformanceLED™ Recessed Downlight Kit

Item #	
Type	
Project	
Notes	
Date	

Application

The SYLVANIA Hi-PerformanceLED Recessed Downlight is available in 3", 4", 6" and 8" models that create high performing light and are optimized for new construction and retrofit applications that previously utilized pin-based compact fluorescent lamps. Installation is done quickly and easily in most standard frames. The lumen selectable switch allows for customizable light replacing up to 100W compact fluorescent lamp and offering up to 60% energy savings when compared to traditional technologies.

Benefits and Features

- Low Glare: UGR <19
- High CRI (>90) ensures a high quality light
- Quick disconnect allows for installation in new construction installation
- Specular reflectors with carefully placed luminous elements offer excellent cutoff for comfortable lighting with high visual impact
- Junction box included to save money and time on job site
- ENERGY STAR® rated to maximize rebate opportunities
- Up to 98 LPW
- 2700K, 3000K, 3500K, 4000K and 5000K color temperatures available
- Energy savings up to 60%
- Flicker free (<2% for 0-10V, <10% for phase-cut)

Electrical

- 120-277VAC for 0-10V dimmable versions, 120VAC for phase-cut dimmable versions
- Power Factor >90%
- THD <20%
- Phase-cut dimming and 0-10V dimming models are both available (see ordering guide for details)

Rated Life

- ≥60,000 hours (L_{70}) @25°C

Warranty

- 5-year

Ambient Operating Range

- -4°F to +104°F (-20°C to +40°C)

Wattage Comparison

Traditional Source	LED System Wattage	Energy Savings
5, 7, or 9W CFL	4, 5 or 6W	33%
13, 16 or 18W CFL	7, 9 or 10.5W	42%
13, 18 or 23W CFL	8, 10 or 12W	48%
18, 23 or 32W CFL	12, 14 or 16W	50%
18, 32 or 2x26W CFL	11, 16 or 21W	60%
2x42 or 100W CFL	31, 41 or 51W	49%

Certifications and Listings

- cETLus
- RoHS
- FCC
- ENERGY STAR
- Classified for stand-alone and retrofit applications as per UL 1598/1598C
- IC rated for direct contact with insulation. Allows for installation without a housing*
- Certified airtight as per ASTM E283-04
- Suitable for dry, damp, and wet locations

Installation

- Installation performed as a stand-alone kit is recommended for hard ceilings. Installation of a recessed incandescent frame is recommended for tiled ceiling application.

*3000 lumen and above models are not IC rated.

Ordering Guide

LEDRT	X	/	R	4A	S	XXXX	X	D	/	9	XX	S
Product Name LED RT = LED Downlight	Size 3 = 3" compatible can 4 = 4" compatible can 6 = 6" compatible can 8 = 8" compatible can		Shape R = Round	Generation 4A = Generation 4A	Selectability S = Lumen selectable	Lumen Output 500 = 350, 450 or 500 lumens 900 = 600, 750 or 900 lumens 1100 = 700, 900 or 1100 lumens 1500 = 1100, 1300 or 1500 lumens 2000 = 1000, 1500 or 2000 lumens 5000 = 3000, 4000 or 5000 lumens	Voltage U = 120-277V S = 120V	Dimming D = 0-10V T = phase-cut dimming		CRI 9 = >90	Color Temp 27 = 2700K 30 = 3000K 35 = 3500K 40 = 4000K 50 = 5000K	Reflector S = Specular

Ordering Information

Item Number	Ordering Abbreviation	Power (W)	Input Voltage (V)	Dimming	CRI	Color Temp	Total Fixture Lumens	ENERGY STAR®	LPW	Options	MTO*
61537	LEDRT3/R4AS500U/D/927S	4, 5 or 6	120-277	0-10V	90	2700K	350, 450 or 500	Yes	83	–	–
61538	LEDRT3/R4AS500UD/930S	4, 5 or 6	120-277	0-10V	90	3000K	350, 450 or 500	Yes	83	–	–
61539	LEDRT3/R4AS500UD/935S	4, 5 or 6	120-277	0-10V	90	3500K	350, 450 or 500	Yes	83	–	–
61540	LEDRT3/R4AS500UD/940S	4, 5 or 6	120-277	0-10V	90	4000K	350, 450 or 500	Yes	83	–	–
61541	LEDRT3/R4AS500UD/950S	4, 5 or 6	120-277	0-10V	90	5000K	350, 450 or 500	Yes	83	–	–
61542	LEDRT4/R4AS900UD/927S	7, 9 or 10.5	120-277	0-10V	90	2700K	600, 750 or 900	Yes	86	–	–
61543	LEDRT4/R4AS900UD/930S	7, 9 or 10.5	120-277	0-10V	90	3000K	600, 750 or 900	Yes	86	–	–
61544	LEDRT4/R4AS900UD/935S	7, 9 or 10.5	120-277	0-10V	90	3500K	600, 750 or 900	Yes	86	–	–
61545	LEDRT4/R4AS900UD/940S	7, 9 or 10.5	120-277	0-10V	90	4000K	600, 750 or 900	Yes	86	–	–
61546	LEDRT4/R4AS900UD/950S	7, 9 or 10.5	120-277	0-10V	90	5000K	600, 750 or 900	Yes	86	–	MTO
61547	LEDRT6/R4AS1100UD/927S	8, 10 or 12	120-277	0-10V	90	2700K	700, 900 or 1100	Yes	92	EMBB Ready	–
61548	LEDRT6/R4AS1100UD/930S	8, 10 or 12	120-277	0-10V	90	3000K	700, 900 or 1100	Yes	92	EMBB Ready	–
61549	LEDRT6/R4AS1100UD/935S	8, 10 or 12	120-277	0-10V	90	3500K	700, 900 or 1100	Yes	92	EMBB Ready	–
61550	LEDRT6/R4AS1100UD/940S	8, 10 or 12	120-277	0-10V	90	4000K	700, 900 or 1100	Yes	92	EMBB Ready	–
61551	LEDRT6/R4AS1100UD/950S	8, 10 or 12	120-277	0-10V	90	5000K	700, 900 or 1100	Yes	92	EMBB Ready	MTO
61552	LEDRT6/R4AS1500UD/930S	12, 14 or 16	120-277	0-10V	90	3000K	1100, 1300 or 1500	Yes	94	EMBB Ready	–
61553	LEDRT6/R4AS1500UD/935S	12, 14 or 16	120-277	0-10V	90	3500K	1100, 1300 or 1500	Yes	94	EMBB Ready	–
61554	LEDRT6/R4AS1500UD/940S	12, 14 or 16	120-277	0-10V	90	4000K	1100, 1300 or 1500	Yes	94	EMBB Ready	–
61555	LEDRT6/R4AS1500UD/950S	12, 14 or 16	120-277	0-10V	90	5000K	1100, 1300 or 1500	Yes	94	EMBB Ready	MTO
61556	LEDRT8/R4AS2000UD/930S	11, 16 or 21	120-277	0-10V	90	3000K	1000, 1500 or 2000	Yes	95	EMBB Ready	–
61557	LEDRT8/R4AS2000UD/935S	11, 16 or 21	120-277	0-10V	90	3500K	1000, 1500 or 2000	Yes	95	EMBB Ready	–
61558	LEDRT8/R4AS2000UD/940S	11, 16 or 21	120-277	0-10V	90	4000K	1000, 1500 or 2000	Yes	95	EMBB Ready	–
61559	LEDRT8/R4AS2000UD/950S	11, 16 or 21	120-277	0-10V	90	5000K	1000, 1500 or 2000	Yes	95	EMBB Ready	MTO
61560	LEDRT8/R4AS5000UD/930S	31, 41 or 51	120-277	0-10V	90	3000K	3000, 4000 or 5000	Yes	98	EMBB Ready	–
61561	LEDRT8/R4AS5000UD/935S	31, 41 or 51	120-277	0-10V	90	3500K	3000, 4000 or 5000	Yes	98	EMBB Ready	–
61562	LEDRT8/R4AS5000UD/940S	31, 41 or 51	120-277	0-10V	90	4000K	3000, 4000 or 5000	Yes	98	EMBB Ready	–
61563	LEDRT8/R4AS5000UD/950S	31, 41 or 51	120-277	0-10V	90	5000K	3000, 4000 or 5000	Yes	98	EMBB Ready	MTO
61564	LEDRT3/R4AS500ST/927S	4, 5 or 6	120	Phase-Cut	90	2700K	350, 450 or 500	Yes	83	–	MTO
61565	LEDRT3/R4AS500ST/930S	4, 5 or 6	120	Phase-Cut	90	3000K	350, 450 or 500	Yes	83	–	MTO
61566	LEDRT3/R4AS500ST/935S	4, 5 or 6	120	Phase-Cut	90	3500K	350, 450 or 500	Yes	83	–	MTO
61567	LEDRT3/R4AS500ST/940S	4, 5 or 6	120	Phase-Cut	90	4000K	350, 450 or 500	Yes	83	–	MTO
61568	LEDRT3/R4AS500ST/950S	4, 5 or 6	120	Phase-Cut	90	5000K	350, 450 or 500	Yes	83	–	MTO
61569	LEDRT4/R4AS900ST/927S	7, 9 or 10.5	120	Phase-Cut	90	2700K	600, 750 or 900	Yes	86	–	MTO
61570	LEDRT4/R4AS900ST/930S	7, 9 or 10.5	120	Phase-Cut	90	3000K	600, 750 or 900	Yes	86	–	MTO
61571	LEDRT4/R4AS900ST/935S	7, 9 or 10.5	120	Phase-Cut	90	3500K	600, 750 or 900	Yes	86	–	MTO
61572	LEDRT4/R4AS900ST/940S	7, 9 or 10.5	120	Phase-Cut	90	4000K	600, 750 or 900	Yes	86	–	MTO
61573	LEDRT4/R4AS900ST/950S	7, 9 or 10.5	120	Phase-Cut	90	5000K	600, 750 or 900	Yes	86	–	MTO
61574	LEDRT6/R4AS1100ST/927S	8, 10 or 12	120	Phase-Cut	90	2700K	700, 900 or 1100	Yes	92	EMBB Ready	MTO
61575	LEDRT6/R4AS1100ST/930S	8, 10 or 12	120	Phase-Cut	90	3000K	700, 900 or 1100	Yes	92	EMBB Ready	MTO
61576	LEDRT6/R4AS1100ST/935S	8, 10 or 12	120	Phase-Cut	90	3500K	700, 900 or 1100	Yes	92	EMBB Ready	MTO
61577	LEDRT6/R4AS1100ST/940S	8, 10 or 12	120	Phase-Cut	90	4000K	700, 900 or 1100	Yes	92	EMBB Ready	MTO
61578	LEDRT6/R4AS1100ST/950S	8, 10 or 12	120	Phase-Cut	90	5000K	700, 900 or 1100	Yes	92	EMBB Ready	MTO

*Indicates Made To Order with a minimum order quantity of 200 each.

Emergency Battery Back-Up Accessories

Emergency Battery Back-Up Specs

NAED	Description	Input Voltage	Frequency	Input Current	Watt Hours	Max Mounting Height	Ambient Temp	Charging Time	Rating	Warranty
60887	EMBB1A5WDC	120-277VAC	50/60 Hz	100mA Max.	9.6wH	22.63ft	0-50°C	24 hours	Damp	4 years
60888	EMBB1A8WDC	120-277VAC	50/60 Hz	100mA Max.	14.4wH	22.26ft	0-50°C	24 hours	Damp	4 years
60889	EMBB1A16WDC	120-277VAC	50/60 Hz	100mA Max.	28.8wH	22.13ft	0-50°C	32 hours	Damp	4 years

Compatibility Table

Hi Performance RT	NAED	Description	Dial Switch No. 1	Dial Switch No. 2	EMBB Current (mA)	EM Lumens (lm)	Duration
RT6 700-900-1100LM	60888	EMBB1A8WDC	2	0	200	850	90 minutes
			1	5	150	650	
RT6 1100-1300-1500LM	60888	EMBB1A8WDC	2	0	200	800	
			1	5	150	600	
RT8 1000-1500-2000LM	60888	EMBB1A8WDC	2	0	200	850	
			1	5	150	650	
RT8 3000-4000-5000LM	60889	EMBB1A16WDC	3	0	300	1200	
	60888	EMBB1A18WDC	2	0	200	1000	

Photometric Data

LEDRT3R4AS500ST9xxS

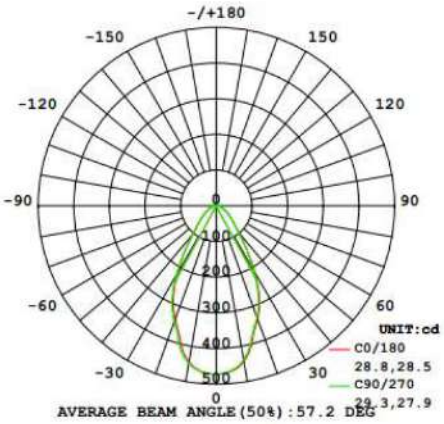

LEDRT3R4AS500UD9xxS

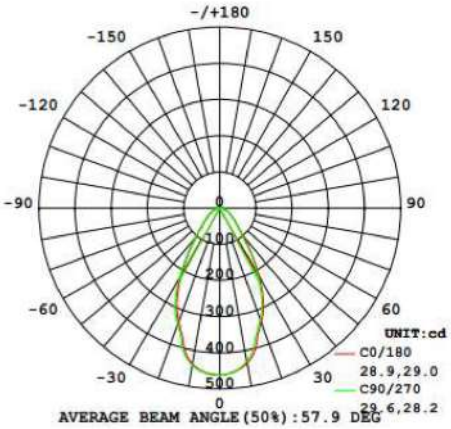

LEDRT4R4AS900ST9xxS

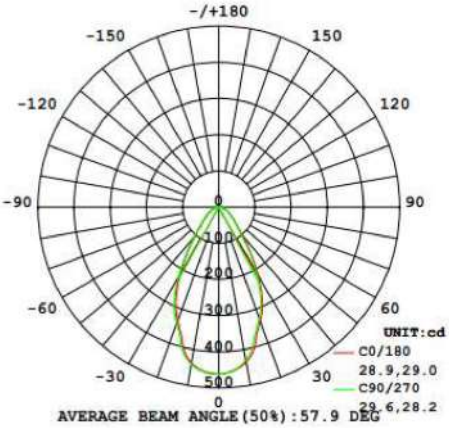

LEDRT4R4AS900UD9xxS

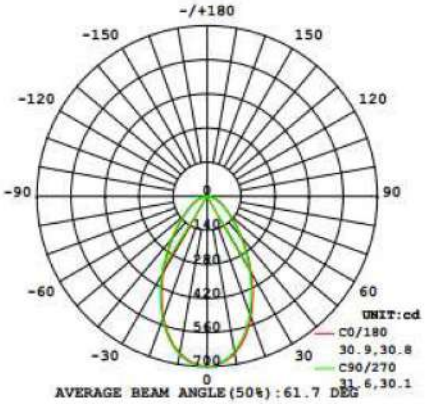

LEDRT6R4AS1100ST9xxS

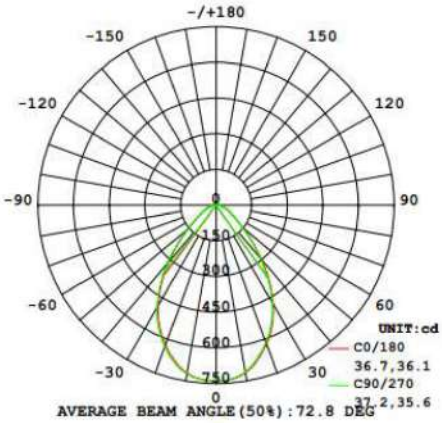

LEDRT6R4AS1100UD9xxS

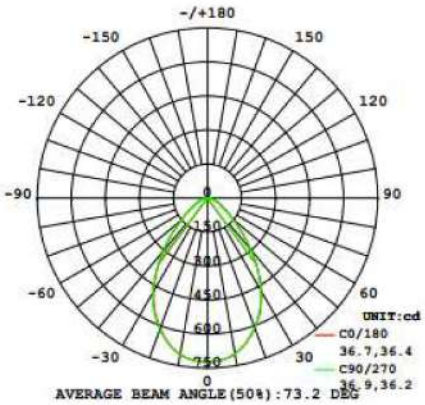

LEDRT6R4AS1500UD9xxS

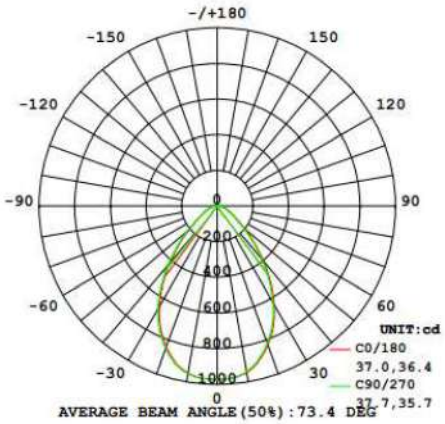

LEDRT8R4AS2000UD9xxS

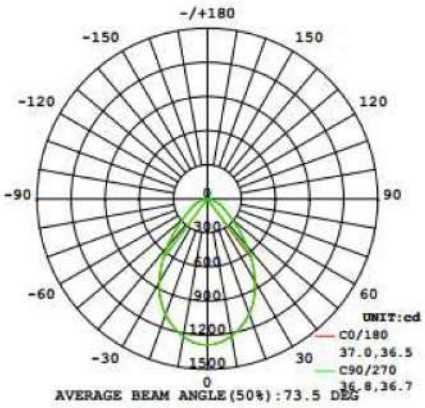

LEDRT8R4AS5000UD9xxS

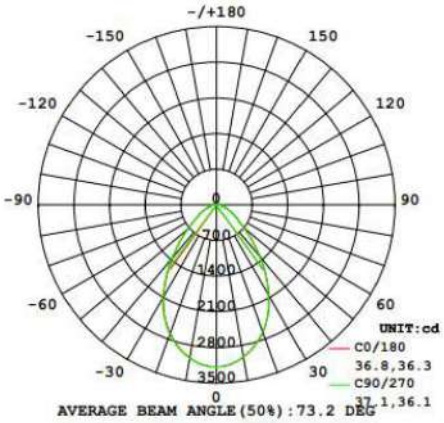

Physical Information

Lamp Description	Width in (mm)	Height in (mm)
RT3	3.86 (98.00)	2.5 (63.50)
RT4	4.73 (120.00)	2.88 (73.10)
RT6	6.70 (170.00)	7.10 (180.10)
RT8	9.06 (230.00)	8.04 (204.10)

RT3

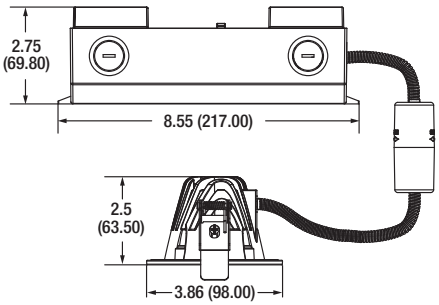

RT4

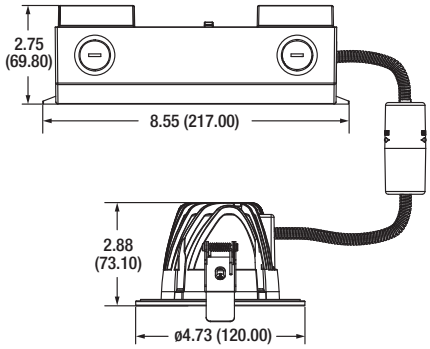

RT6

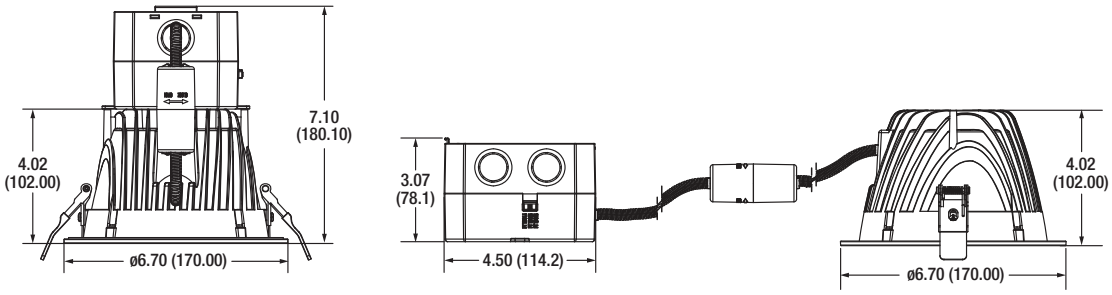

RT8

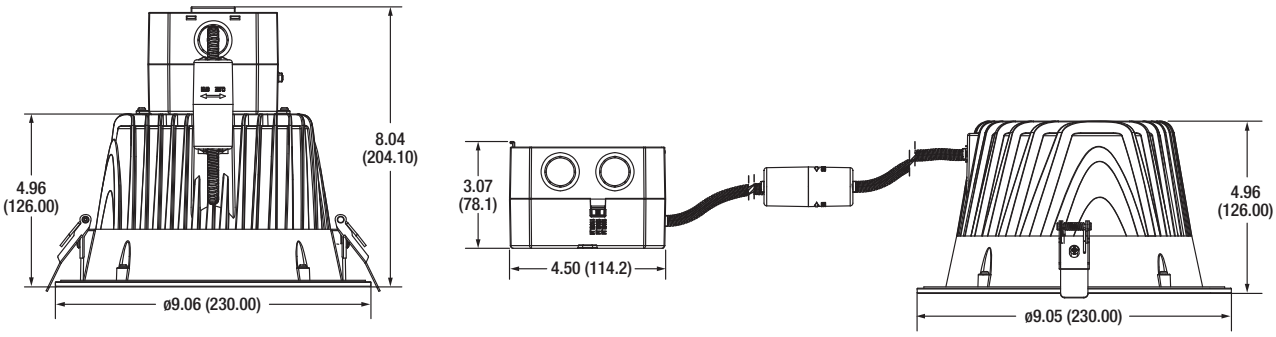

Dimensions in inches (mm)

LEDVANCE LLC
200 Ballardvale Street
Wilmington, MA 01887 USA
Phone 1-800-LIGHTBULB (1-800-544-4828)
www.sylvania.com

Name:
Email:
Phone:

SYLVANIA and LEDVANCE are registered trademarks.
All other trademarks are those of their respective owners.
Licensee of product trademark SYLVANIA in general lighting.
Specifications subject to change without notice.

/sylvania /sylvania

© 2020 LEDVANCE LLC

SYLVANIA Luminaires

UltraLED™ MICRODISK™

Item #	
Type	
Project	
Notes	
Date	

Application

The SYLVANIA UltraLED MICRODISK is a slim profile LED downlight kit with remote driver that operates on 120-277V universal input voltage. The 1" thin design allows for installation directly under joists in new and remodel construction. The high performing MICRODISK's IC design allows for installation without a housing. Ideal in bathrooms/kitchens, closets/attics, soffits, stairwells, or corridors.

Benefits and Features

- CRI of greater than 90 ensures a high quality of light
- No warm-up time, instant-on with full light output and stable lamp to lamp color
- 5VA fire-rated junction box eliminates need for recessed can
- Up to 91 LPW
- 2700K, 3000K, 3500K, 4000K, and 5000K color temperature
- CRI >90
- Phase-cut dimmable products offered in 8.5 and 12W, 0-10V dimmable versions offered in 8 and 13W
- 120° beam angle
- Energy savings up to 92%

Electrical

- 120/277VAC (0-10V dimmable products)
- 120V (phase-cut dimmable products)
- Power Factor 92%
- THD <20%
- 0-10V dimmable or Phase-Cut dimmable (please see ordering information)

Rated Life

- 50,000 hours (L_{70})

Warranty

- Standard 5-year luminaire warranty (LEDLUM001)

Ambient Operating Range

- -4°F to +104°F (-20°C to +40°C)

Certifications and Listings

- cETLus
- ENERGY STAR®
- RoHS
- FCC
- California Title 24 Compliant

Wattage Comparison

Traditional Source	LED System Wattage	Energy Savings
100W BR40	8	92%
120W Incandescent	8, 13	90%

Installation

- For installation into 4" and 6" ceiling cut-outs
- 6" MICRODISK can be used in 8" applications with the trim extender accessory

Additional Specifications

- Suitable for use in closets, compliant with NFPA 70, NEC section 410.16 (A)(3) and 410.16 (C)(5)
- Compatible with Leading or Trailing Edge Dimmers: Leviton SureSlide (Model# 6674), Leviton Maestro C-L (Model# MACL-153M), Lutron Diva (Model# DVCL-153P), Lutron Caseta (Model# PD-6WCL), Legrand Radiant (Model# RHCL453P), Lutron Diva (Model# DVELV-300P), Lutron Maestro (Model# MAELV-600)
- Compatible with 0-10V Dimmers
- Complies with cULus Wet location listed, ceiling only (shower rated), and Damp location listed ceiling and wall.
- Not intended for use with emergency light fixtures or exit lights

Ordering Guide

LED	/	MD	X	/	XXX	/	9	XX	/	UNV
LED		Product Name MD = MICRODISK™	Size 4 = 4" 6 = 6"		Lumen Output 650 = 650 lumens 900 = 900 lumens 1100 = 1100 lumens		CRI 9 = >90	CCT 27 = 2700 30 = 3000 35 = 3500 40 = 4000 50 = 5000		Voltage UNV = 120-277

Ordering Information

Item Number	Ordering Abbreviation	Power (W)	Input Voltage	Dimming	CRI	Color Temp (CCT)	Lumens	Lumens per Watt	ENERGY STAR® Listed
60700	LED/MD4/650/927/UNV	8	120/277	0-10V	>90	2700K	650	81	Yes
60696	LED/MD4/650/930/UNV	8	120/277	0-10V	>90	3000K	650	81	Yes
60701	LED/MD4/650/935/UNV	8	120/277	0-10V	>90	3500K	650	81	Yes
60694	LED/MD4/650/940/UNV	8	120/277	0-10V	>90	4000K	650	81	Yes
60697	LED/MD4/650/950/UNV	8	120/277	0-10V	>90	5000K	650	81	Yes
60702	LED/MD6/1100/927/UNV	13	120/277	0-10V	>90	2700K	1100	91	Yes
60698	LED/MD6/1100/930/UNV	13	120/277	0-10V	>90	3000K	1100	91	Yes
60703	LED/MD6/1100/935/UNV	13	120/277	0-10V	>90	3500K	1100	91	Yes
60695	LED/MD6/1100/940/UNV	13	120/277	0-10V	>90	4000K	1100	91	Yes
60699	LED/MD6/1100/950/UNV	13	120/277	0-10V	>90	5000K	1100	91	Yes
40051	LED/MD4/650/DIM/927	8.5	120V	Phase-Cut	>90	2700K	650	76	Yes
40052	LED/MD4/650/DIM/930	8.5	120V	Phase-Cut	>90	3000K	650	76	Yes
40053	LED/MD4/650/DIM/940	8.5	120V	Phase-Cut	>90	4000K	650	76	Yes
40054	LED/MD4/650/DIM/950	8.5	120V	Phase-Cut	>90	5000K	650	76	Yes
40055	LED/MD6/900/DIM/927	12	120V	Phase-Cut	>90	2700K	900	75	Yes
40056	LED/MD6/900/DIM/930	12	120V	Phase-Cut	>90	3000K	900	75	Yes
40057	LED/MD6/900/DIM/940	12	120V	Phase-Cut	>90	4000K	900	75	Yes
40058	LED/MD6/900/DIM/950	12	120V	Phase-Cut	>90	5000K	900	75	Yes

Accessories

Trim Rings

Item Number	Finish	Description
74992	Dark Bronze 4" Trim Ring	LED/MD4TRIMDKBZ
74993	Black 4" Trim Ring	LED/MD4TRIMBLK
74994	Oil Rubbed Bronze 4" Trim Ring	LED/MD4TRIMORBZ
74995	Satin 4" Trim Ring	LED/MD4TRIMSN
74996	Dark Bronze 6" Trim Ring	LED/MD6TRIMDKBZ
74997	Black 6" Trim Ring	LED/MD6TRIMBLK
74998	Oil Rubbed Bronze 6" Trim Ring	LED/MD6TRIMORBZ
74999	Satin 6" Trim Ring	LED/MD6TRIMSN
75082	Trim Ring Extender	RT6/8/TRIMEXT

Trim Rings

6" Trim Ring

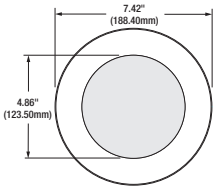

4" Trim Ring

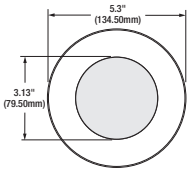

74992/74996

74994/74998

74993/74997

74995/74999

Trim Ring Extender

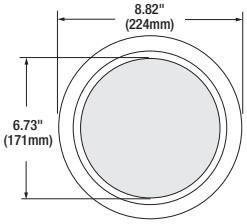

75082

Luminous Intensity Distribution Diagrams

650 Lumens

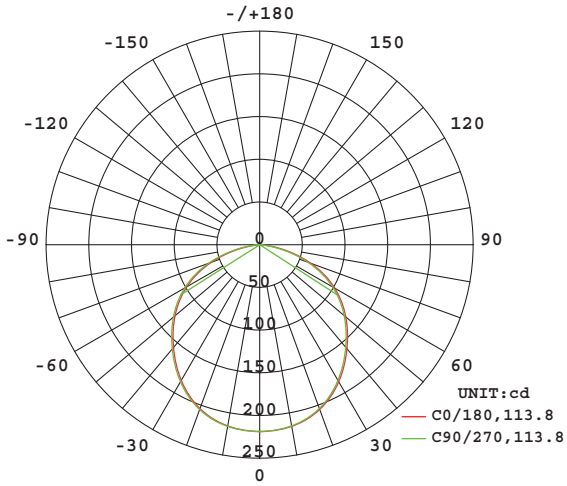

AVERAGE BEAM ANGLE(50%):113.8 DEG

Zonal Lumen Distribution

Zone	Lumens	% Retrofit Kit
0-20	149	13
0-30	316	27
0-40	518	44
0-60	919	78
0-80	1152	98
0-90	1176	100
10-90	1137	97
20-40	369	31
20-50	580	49
40-70	548	47
60-80	233	20
70-80	86	7
80-90	24	2
0-180	1176	100

Illuminance at a Distance

Distance to Illuminated Plane (Feet)	Footcandles Beam Center	Footcandles Beam Edge	Beam Diameter (feet)
2	101.6 fc	8.5 fc	6.1
4	25.4 fc	2.1 fc	12.1
6	11.3 fc	0.9 fc	18.2
8	6.4 fc	0.5 fc	24.3
10	4.1 fc	0.3 fc	30.3
12	2.8 fc	0.2 fc	36.4

Spacing to Mounting Height Ratio

Spacing Criterion (0-180)	1.26
Spacing Criterion (90-270)	1.26
Spacing Criterion (Diagonal)	1.38

1100 Lumens

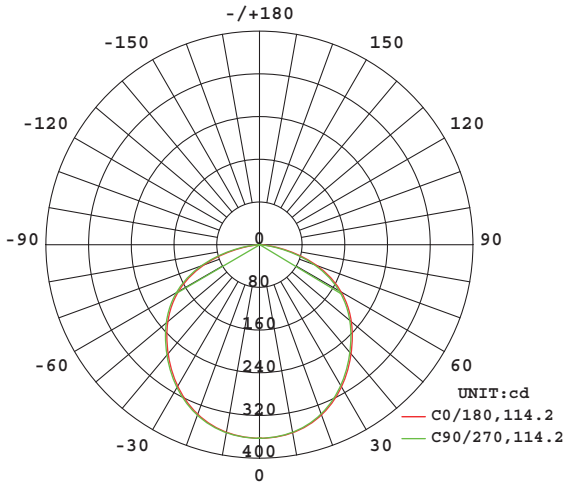

AVERAGE BEAM ANGLE(50%):114.2 DEG

Zonal Lumen Distribution

Zone	Lumens	% Retrofit Kit
0-20	90	13
0-30	190	27
0-40	310	45
0-60	548	79
0-80	683	98
0-90	697	100
10-90	674	97
20-40	221	32
20-50	346	50
40-70	324	46
60-80	135	19
70-80	49	7
80-90	13	2
0-180	697	100

Illuminance at a Distance

Distance to Illuminated Plane (Feet)	Footcandles Beam Center	Footcandles Beam Edge	Beam Diameter (feet)
2	61.3 fc	5.4 fc	5.9
4	15.3 fc	1.3 fc	11.8
6	6.8 fc	0.6 fc	17.7
8	3.8 fc	0.3 fc	23.6
10	2.5 fc	0.2 fc	29.5
12	1.7 fc	0.1 fc	35.4

Spacing to Mounting Height Ratio

Spacing Criterion (0-180)	1.26
Spacing Criterion (90-270)	1.26
Spacing Criterion (Diagonal)	1.38

Physical Information

4 inch MICRODISK™ Phase-Cut

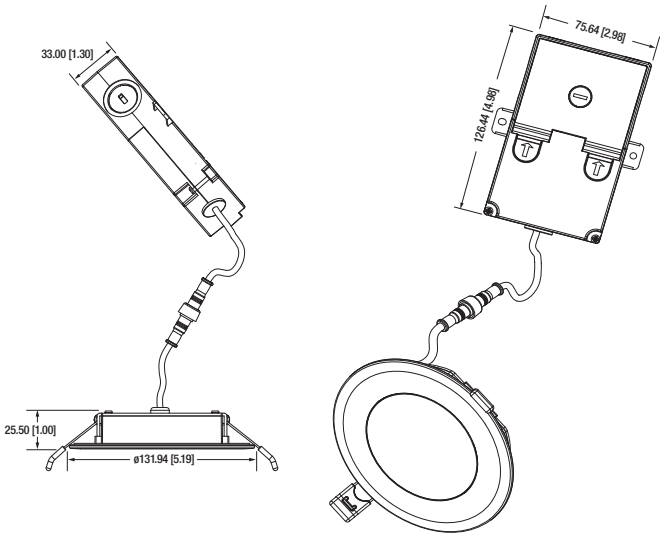

6 inch MICRODISK Phase-Cut

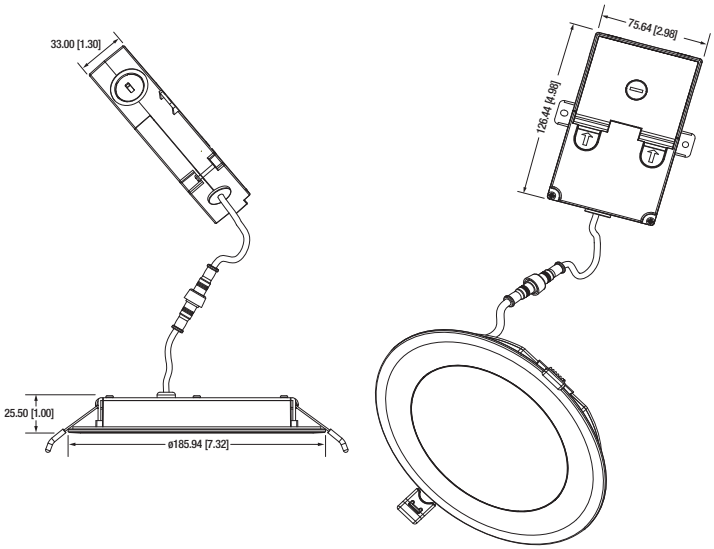

LEDVANCE LLC
200 Ballardvale Street
Wilmington, MA 01887 USA
Phone 1-800-LIGHTBULB (1-800-544-4828)
www.sylvania.com

SYLVANIA and LEDVANCE are registered trademarks.
All other trademarks are those of their respective owners.
Licensee of product trademark SYLVANIA in general lighting.
Specifications subject to change without notice.

/sylvania /sylvania

Name:

Email:

Phone:

© 2019 LEDVANCE LLC

SYLVANIA Luminaires

ValueLED™ Selectable Slim MICRODISK™

Item #	
Type	
Project	
Notes	
Date	

Application

The SYLVANIA ValueLED Selectable Slim MICRODISK is a slim profile LED downlight kit with remote driver that operates at 120VAC. The 1/2" height allows for installation directly under joists in new and remodel construction.

Benefits and Features

- 5 CCT selectable enabled through a switch located on the driver
- High CRI (>90) ensures a high quality light
- 1/2" height facilitates installations in most residential applications
- Up to 80 LPW
- CRI >90
- Offered in 500 (8W), 800 (13W), 1200 (16W), 1600 (20W)
- 3", 4", 6", and 8" size versions available
- Energy savings up to 92%

Electrical

- Designed to operate at 120VAC
- Power Factor >90%
- THD < 20%
- Phase-cut dimmable

Rated Life

- 50,000 hours (L_{70})

Warranty

- 5-year

Ambient Operating Range

- -4°F to +104°F (-20°C to +40°C)

Certifications and Listings

- cETLus
- RoHS
- FCC
- ENERGY STAR®

Wattage Comparison

Traditional Source	LED System Wattage	Energy Savings
100W BR40	8W	92%
120W Incandescent	13W	90%
23W CFL	16W	30%
32W CFL	20W	63%

Installation

- For installation into 3", 4", 6", and 8" ceiling cut-outs.

Ordering Guide

LEDMD	X	R	/	2A	/	XXXX	S	T	/	9	SC3
Product Name LEDMD = LED MICRODISK	Size 3 = 3" 4 = 4" 6 = 6" 8 = 8"	Shape R = Round		Generation 2A = Generation 2A		Lumens 500 = 500 lumens 800 = 800 lumens 1200 = 1200 lumens 1600 = 1600 lumens	Voltage S = 120V	Dimming T = Phase-cut dimming		CRI 9 = >90	CCT SC3 = Selectable Color (2700, 3000, 3500, 4000, 5000K)

Ordering Information

Item Number	Ordering Abbreviation	Wattage	Input Voltage	Dimming	CRI	Color Temp	Total Fixture Lumens	LPW	ENERGY STAR®	Case Quantity
61403	LEDMD3R/2A/500ST/9SC3	8	120	Phase-Cut	90	2700, 3000, 3500, 4000 or 5000K	500	62.5	Yes	1
61404	LEDMD4R/2A/800ST/9SC3	13	120	Phase-Cut	90	2700, 3000, 3500, 4000 or 5000K	800	61.5	Yes	1
61405	LEDMD6R/2A/1200ST/9SC3	16	120	Phase-Cut	90	2700, 3000, 3500, 4000 or 5000K	1200	75.0	Yes	1
61406	LEDMD6R/2A/1200ST/9SC3	16	120	Phase-Cut	90	2700, 3000, 3500, 4000 or 5000K	1200	75.0	Yes	4
61407	LEDMD8R/2A/1600ST/9SC3	20	120	Phase-Cut	90	2700, 3000, 3500, 4000 or 5000K	1600	80.0	Yes	1

Photometric Data

3-inch

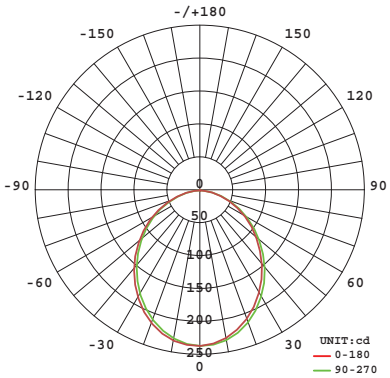

AVERAGE BEAM ANGLE(50%):100.4 DEG

4-inch

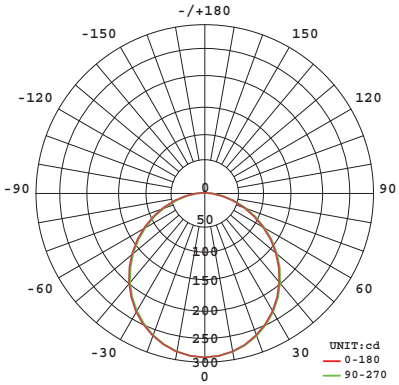

AVERAGE BEAM ANGLE(50%):109.1 DEG

Zonal Lumen Distribution

Zone	Lumens	% Retrofit Kit
0-5	5.5	0.95
0-10	21.8	3.75
0-15	48.2	8.28
0-20	83.3	14.32
0-25	125.8	21.61
0-30	173.6	29.84
0-35	225.1	38.67
0-40	278.1	47.79
0-45	330.8	56.84
0-50	381.4	65.54
0-55	428.5	73.63
0-60	470.6	80.87
0-65	506.8	87.08
0-70	536.0	92.10
0-75	557.8	95.85
0-80	572.2	98.32
0-85	579.6	99.60
0-90	581.3	99.89
0-95	581.4	99.90
0-100	581.4	99.90
0-105	581.4	99.90
0-110	581.4	99.91
0-115	581.5	99.91
0-120	581.5	99.92
0-125	581.5	99.93
0-130	581.6	99.93
0-135	581.6	99.94
0-140	581.7	99.95
0-145	581.7	99.96
0-150	581.8	99.97
0-155	581.8	99.98
0-160	581.9	99.98
0-165	581.9	99.99
0-170	581.9	100.00
0-175	582.0	100.00
0-180	582.0	100.00

Zonal Lumen Distribution

Zone	Lumens	% Retrofit Kit
0-5	7.0	0.86
0-10	27.6	3.41
0-15	61.1	7.56
0-20	106.3	13.15
0-25	161.4	19.98
0-30	224.6	27.80
0-35	293.6	36.33
0-40	365.8	45.27
0-45	438.9	54.31
0-50	510.3	63.14
0-55	577.7	71.49
0-60	638.8	79.05
0-65	691.9	85.62
0-70	735.6	91.03
0-75	768.9	95.15
0-80	791.6	97.96
0-85	803.9	99.49
0-90	807.3	99.90
0-95	807.3	99.90
0-100	807.3	99.91
0-105	807.4	99.91
0-110	807.4	99.91
0-115	807.4	99.92
0-120	807.5	99.92
0-125	807.5	99.93
0-130	807.6	99.94
0-135	807.6	99.94
0-140	807.7	99.95
0-145	807.8	99.96
0-150	807.8	99.97
0-155	807.9	99.98
0-160	808.0	99.98
0-165	808.0	99.99
0-170	808.1	100.00
0-175	808.1	100.00
0-180	808.1	100.00

Photometric Data (continued)

6-inch

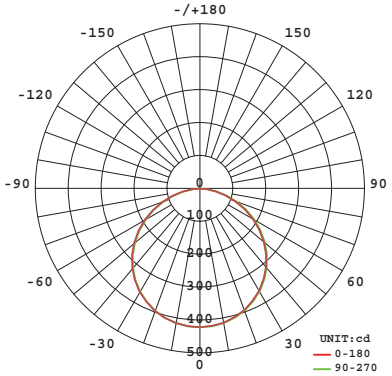

AVERAGE BEAM ANGLE(50%):112.6 DEG

Zonal Lumen Distribution

Zone	Lumens	% Retrofit Kit
0-5	10.0	0.83
0-10	39.8	3.28
0-15	88.3	7.28
0-20	154.0	12.70
0-25	234.6	19.34
0-30	327.5	27.00
0-35	429.5	35.41
0-40	537.2	44.29
0-45	646.8	53.33
0-50	754.6	62.22
0-55	857.0	70.65
0-60	950.5	78.36
0-65	1032.1	85.09
0-70	1099.6	90.65
0-75	1151.2	94.91
0-80	1186.6	97.83
0-85	1206.0	99.43
0-90	1211.6	99.89
0-95	1211.7	99.90
0-100	1211.7	99.90
0-105	1211.8	99.91
0-110	1211.8	99.91
0-115	1211.9	99.92
0-120	1212.0	99.92
0-125	1212.0	99.93
0-130	1212.1	99.94
0-135	1212.2	99.94
0-140	1212.3	99.95
0-145	1212.4	99.96
0-150	1212.5	99.97
0-155	1212.6	99.98
0-160	1212.7	99.99
0-165	1212.8	99.99
0-170	1212.9	100.00
0-175	1212.9	100.00
0-180	1212.9	100.00

8-inch

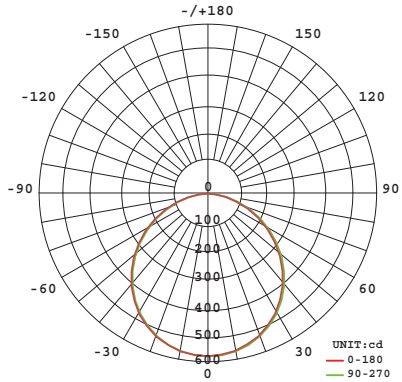

AVERAGE BEAM ANGLE(50%):112.9 DEG

Zonal Lumen Distribution

Zone	Lumens	% Retrofit Kit
0-5	13.6	0.82
0-10	54.2	3.27
0-15	120.2	7.26
0-20	209.8	12.67
0-25	319.9	19.31
0-30	446.9	26.98
0-35	586.5	35.41
0-40	733.8	44.30
0-45	883.9	53.36
0-50	1031.4	62.27
0-55	1171.3	70.71
0-60	1298.9	78.42
0-65	1410.3	85.14
0-70	1502.2	90.69
0-75	1572.5	94.94
0-80	1620.5	97.83
0-85	1646.9	99.43
0-90	1654.5	99.89
0-95	1654.7	99.90
0-100	1654.8	99.90
0-105	1654.8	99.91
0-110	1654.9	99.91
0-115	1655.0	99.92
0-120	1655.1	99.92
0-125	1655.2	99.93
0-130	1655.3	99.94
0-135	1655.4	99.94
0-140	1655.6	99.95
0-145	1655.7	99.96
0-150	1655.9	99.97
0-155	1656.0	99.98
0-160	1656.1	99.99
0-165	1656.3	99.99
0-170	1656.3	100.00
0-175	1656.4	100.00
0-180	1656.4	100.00

Physical Information

Item Number	(A) Diameter in (mm)	(B) Height in (mm)	Weight (lb)
61403	3.9 (100)	0.9 (2.35)	5.29
61404	4.9 (125)	0.9 (2.35)	9.31
61405	6.8 (175)	0.9 (2.35)	10.65
61407	8.8 (225)	0.9 (2.35)	17.04

3-inch

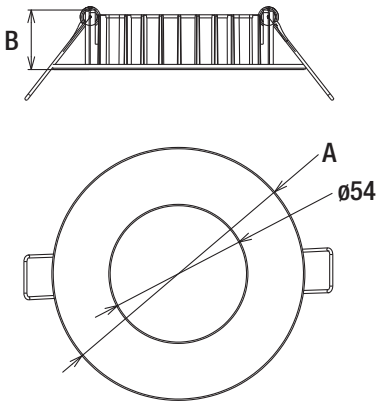

4-inch

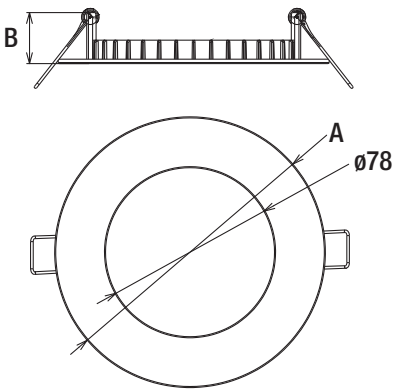

6-inch

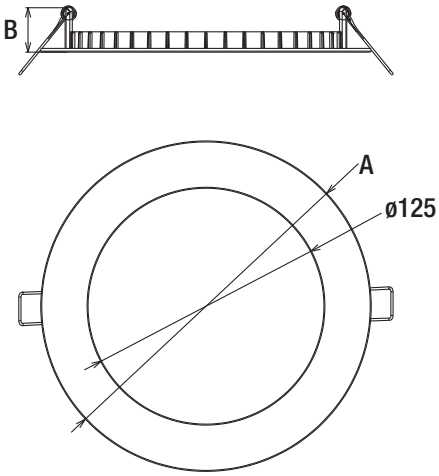

8-inch

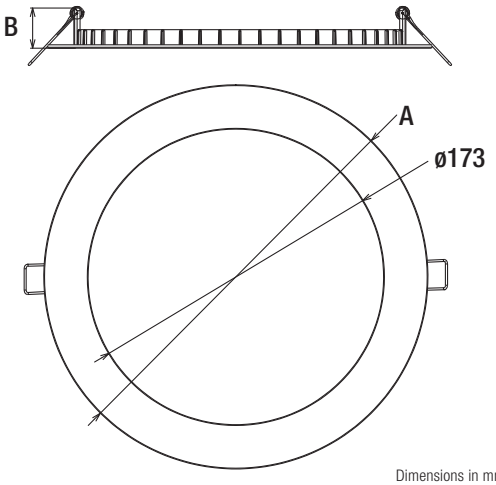

Dimensions in mm

Additional Specifications

- Suitable for indoor and outdoor, dry and damp locations.
- Not intended for use with emergency light fixtures or exit lights.
- Suitable for use in closets, compliant with NFPA 70, NEC section 410.16 (A)(3) and 410.16 (C)(5)
- For use in housings that can structurally support a lamp weighing one pound.

LEDVANCE LLC
200 Ballardvale Street
Wilmington, MA 01887 USA
Phone 1-800-LIGHTBULB (1-800-544-4828)
www.sylvania.com

Name:
Email:
Phone:

SYLVANIA and LEDVANCE are registered trademarks.
All other trademarks are those of their respective owners.
Licensee of product trademark SYLVANIA in general lighting.
Specifications subject to change without notice.

/sylvania /sylvania

© 2020 LEDVANCE LLC

SYLVANIA Luminaires

UltraLED™ 8-10" Quad Downlight

Item #	
Type	
Project	
Notes	
Date	

Application

The SYLVANIA UltraLED 8-10" Quad downlight luminaire is an eight inch LED recessed downlight kit creating high performing white light which is optimized for new construction and retrofit applications in office spaces, property management, retail, hospitality, and healthcare environments.

Benefits and Features

- Provides excellent color rendering (90 CRI)
- Virtually no UV or infrared radiation
- Lasts up to 3 times longer than CFL pin base lamps
- No warm-up time, instant-on with full light output and stable lamp to lamp color
- Suitable for dry, damp and wet locations
- Up to 80 LPW
- 3000K, 3500K, and 4000K color temperature
- CRI ≥90
- Offered in 25 watts
- Optical design efficiently directs light output in an 80° beam angle with low glare
- Energy savings up to 54%

Electrical

- Designed to operate in the universal (120-277 VAC) voltage range
- Power Factor ≥90%
- THD ≤20%
- 0-10V dimmable
- Sound Rating: <24dBA
- Input Frequency: 60Hz

Rated Life

- 50,000 hours (L_{70})

Warranty

- 5-year

Wattage Comparison

Traditional Source	Traditional System Wattage	LED System Wattage	Energy Savings
2 x 26W CFL	52	25	48%

Ambient Operating Range

- -4°F to +113°F (-20°C to +45°C)

Certifications and Listings

- cETLus
- ENERGY STAR®
- RoHS
- FCC

Installation

- Installation is done quickly and easily in most standard eight to ten inch frames

Ordering Guide

LED	RT810	/	HO	/	Q	/	2000	/	DIM010	/	9	XX	/	UNV
Product Name LED = LED technology	Application / Size RT810 = suitable for 8-10" retrofits		Output HO = high output		Shape Q = Quad		Lumens 2000 = 2000 lumens		Dimming DIM010 = 0-10V dimming		CRI CRI = > 90	Color Temp 30 = 3000K 35 = 3500K 40 = 4000K		Voltage UNV = 120-277V

Ordering Information

Item Number	Ordering Abbreviation	Wattage	Input Voltage	Dimming	CRI	Color Temp	Distribution	Total Fixture Lumens	LPW	ENERGY STAR® Rated	MTO*
40445	LEDRT810/HO/Q/2000/DIM010/930/UNV	25	120-277	0-10V	90	3000K	80°	2000	80	Yes	–
40446	LEDRT810/HO/Q/2000/DIM010/935/UNV	25	120-277	0-10V	90	3500K	80°	2000	80	Yes	MTO
40447	LEDRT810/HO/Q/2000/DIM010/940/UNV	25	120-277	0-10V	90	4000K	80°	2000	80	Yes	MTO

*Made To Order

Photometrics

Luminous Intensity Distribution Diagram

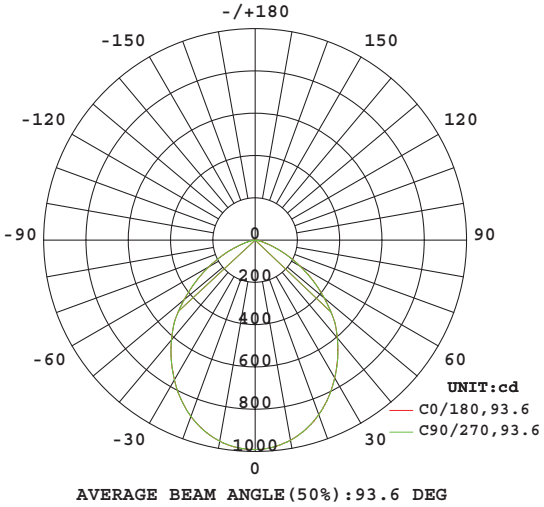

Zonal Lumen Distribution

Zone	Lumens	% Fixture
0-20	355	17
0-30	734	35
0-40	1163	56
0-60	1872	89
0-80	2087	100
0-90	2097	100
0-180	2097	100

Illuminance at a Distance

Distance to Illuminated Plane (Feet)	Footcandles Beam Center	Footcandles Beam Edge	Beam Diameter (Feet)
2	39.7	247.6	4.3
4	9.9	61.9	8.5
6	4.4	27.5	12.8
8	2.5	15.5	17
10	1.6	9.9	21.3
12	1.1	6.9	25.6

Spacing to Mounting Height Ratio

Spacing Criterion (0-180)	1.16
Spacing Criterion (90-270)	1.16
Spacing Criterion (Diagonal)	1.26

Physical Information

Lamp Description	(A) Length in mm (in.)	(B) Width in mm (in.)	(C) Height in mm (in.)
Quad Downlight	280 (11.02)	280 (11.02)	87.7 (3.45)

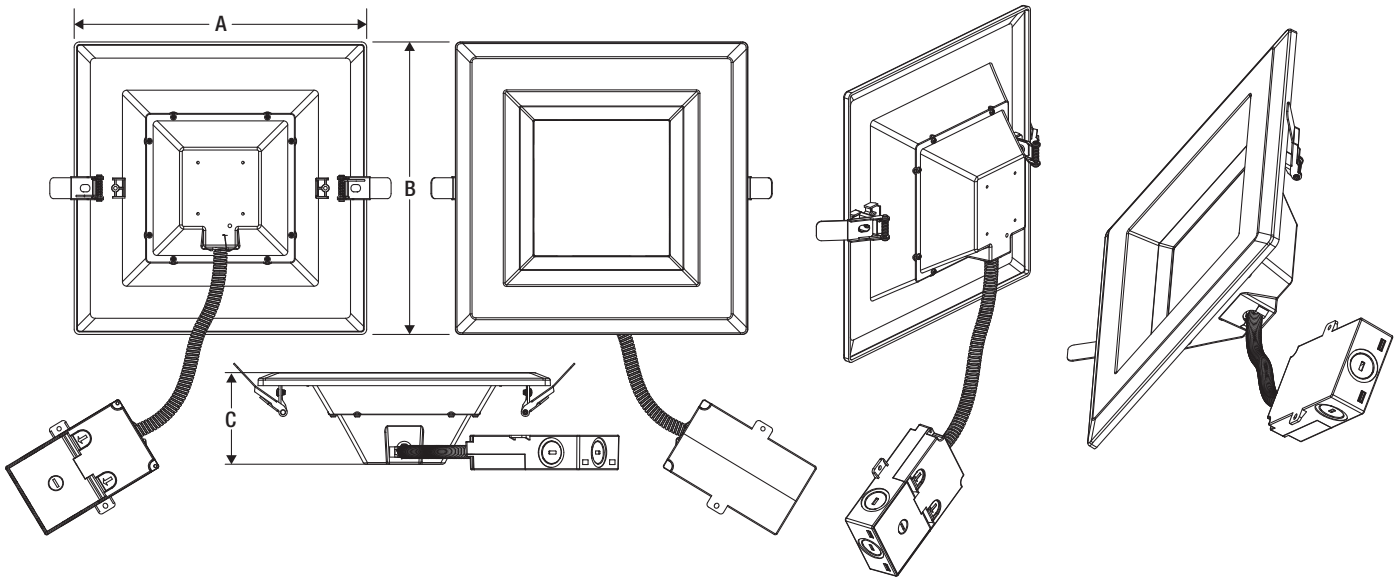

Additional Specifications

- Weight: 3.28 lbs.
- Compatible with Leviton dimmer model IP710-DL
- Designed to install in standard 8-10" CFL mounting frame. For a list of compatible housings, please refer to www.sylvania.com
- Suitable for indoor/outdoor use, including dry, damp and wet location environments.
- UL rated for wet applications

LEDVANCE LLC
200 Ballardvale Street
Wilmington, MA 01887 USA
Phone 1-800-LIGHTBULB (1-800-544-4828)
www.sylvania.com

Name:
Email:
Phone:

SYLVANIA and LEDVANCE are registered trademarks.
All other trademarks are those of their respective owners.
Licensee of product trademark SYLVANIA in general lighting.
Specifications subject to change without notice.

/sylvania /sylvania

© 2019 LEDVANCE LLC

SYLVANIA Luminaires

Slim Downlight

Catalog #	Type
Project	
Notes	
Date	
Prepared by	

Dimensions

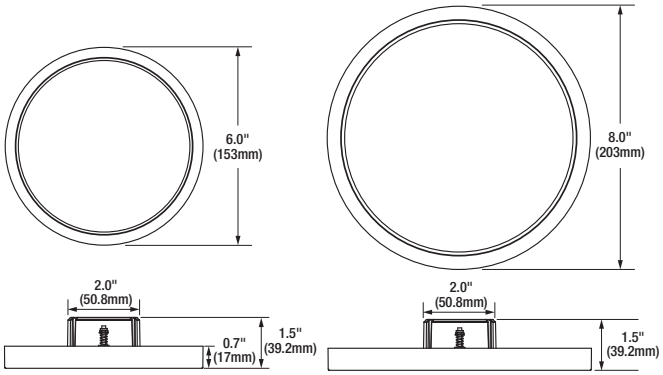

Product Features

- Edge-lit LED technology for even, low glare illumination
- Self-adjusting springs for flush installation
- Low profile, seamless design to upgrade the space
- Directly mounts to j-box for low plenum applications

Wattage Comparison Chart

Slim Downlight

Traditional Source	Traditional System Wattage	LED System Wattage	Energy Savings
2 x 13 W CFL	26	10	61%
1 x 32 W CFL	32	14	56%

Specifications

Weight: 6": 1.5lbs (0.6kg) 8": 2.0lbs (0.9kg)

Construction: Aluminum back plate with polycarbontate trim and lens. The standard finish is white.

LED System: LED system with a life rating of ≥50,000 hours at L_{70} @25°C. Luminaire efficacy up to 71 LPW.

Electrical: Offered in 10 and 14 Watts, the luminaire is designed to operate at 120-277V with driver on board. The power factor is ≥90% and THD is ≤20%.

Dimming: The driver is phase-cut dimmable at 120V (down to 10%).

Color Characteristics: CRI>80; CCT of 2700K, 3000K or 4000K.

Optics: White polycarbonate lens with edge-lit LED technology.

Installation: Luminaire mounts to recessed outlet box.

Operating Temperature: +14°F to +104°F (-10°C to +40°C).

Listings: cULus listed to UL1598 standards for damp locations.

Note: Suitable for use in closets, compliant with NFPA 70, NEC section 410.16 (A)(3) and 410.16 (C)(5).

Warranty: Standard 5-year luminaire warranty (LEDLUM001).

Note: Specifications subject to change without notice. IES files available online.

c UL us LISTED · RoHS compliant · FC · ENERGY STAR

Ordering Guide

Item Number:

SLMDNLR	1A	/	XXX	UNV	T	8	XX	/	XX	J	/	WH
Product Name SLMDNLR	Generation 1A		Wattage* 010 = 10W 014 = 14W	Voltage UNV = 120-277V	Dimming T = Phase-cut (120V ONLY)	CRI 8 ≥80	Color Temp (CCT) 27 = 2700K 30 = 3000K 40 = 4000K		Diameter 06 = 6 in 08 = 8 in	Mounting J = J-Box		Color/Finish WH = White

*10W only available in 6in, 14W only available in 8in.

SYLVANIA

Photometric Data

Average Illuminance (FC) at 30" AFF and avg/min uniformity
80/50/20 Reflectances

		6' Wide Corridor 8.0-8.5 ft Mounting Height	6' Wide Corridor 9.0-9.5 ft Mounting Height	6' Wide Corridor 10.0-10.5 ft Mounting Height
	NAEDs	**10' Fixture Spacing**		
10W	60003	7.1fc/1.15 (Avg/Min)	6.4fc/1.11 (Avg/Min)	5.8fc/1.11 (Avg/Min)
	60004			
	60005			
14W	60058	10.5fc/1.14 (Avg/Min)	9.5fc/1.12 (Avg/Min)	8.6fc/1.09 (Avg/Min)
	60057			
	60056			

Ordering Information

Item Number	Ordering Abbreviation	Power (W)	Input Voltage	Dimming**	CRI	Color Temp (CCT)	Size	Total Fixture Lumens	LPW*
60003	SLMDNLR1A/010UNVT827/06J/WH	10	120-277V	Phase-cut	>80	2700K	6"	700	70
60004	SLMDNLR1A/010UNVT830/06J/WH	10	120-277V	Phase-cut	>80	3000K	6"	750	75
60005	SLMDNLR1A/010UNVT840/06J/WH	10	120-277V	Phase-cut	>80	4000K	6"	800	80
60058	SLMDNLR1A/014UNVT827/08J/WH	14	120-277V	Phase-cut	>80	2700K	8"	980	70
60057	SLMDNLR1A/014UNVT830/08J/WH	14	120-277V	Phase-cut	>80	3000K	8"	1050	75
60056	SLMDNLR1A/014UNVT840/08J/WH	14	120-277V	Phase-cut	>80	4000K	8"	1120	80

*LPW per LM79 report
**Only dimmable at 120V

LEDVANCE LLC
200 Ballardvale Street
Wilmington, MA 01887 USA
Phone 1-800-LIGHTBULB (1-800-544-4828)
www.sylvania.com

SYLVANIA and LEDVANCE are registered trademarks.
All other trademarks are those of their respective owners.
Licensee of product trademark SYLVANIA in general lighting.
Specifications subject to change without notice.

/sylvania /sylvania

© 2019 LEDVANCE LLC

SYLVANIA

LEDVANCE Luminaires

Surface Mount

Catalog #	Type
Project	
Notes	
Date	
Prepared by	

Dimensions

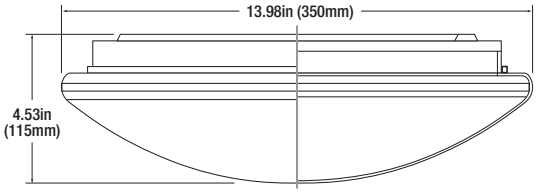

Dimensions in inches (mm)

Product Features

The Surface Mount luminaires are environmentally preferable LED alternatives to traditional CFL or Incandescent luminaires, offering up to 75% in energy savings. Ideal in place of traditional luminaires, or as new installations, the Surface Mount luminaires can be used in residential, educational, property management or hospitality applications.

These luminaires offer soft, uniform illumination and a contemporary design for universal applications. LEDVANCE luminaires assure optimum light engine performance for extended service and rated life (≥50,000 hours L_{70}).

Wattage Comparison Chart

Traditional Source	Traditional System Wattage	LED System Wattage	Energy Savings
1x32W CFL	36	25	31%
100W Inc	100	25	75%

Specifications

Weight: 1.26lbs (.57kg)

Construction: Steel back plate with a white powder coating finish with an acrylate/PMMA lens cover. The standard color is white.

LED System: LED system with a life rating of ≥50,000 hours at L_{70} @25°C. Luminaire efficacy up to 65 LPW.

Electrical: Offered in 25 Watts, the luminaire is designed to operate at 120V with driver on board. The power factor is ≥80% and THD is ≤20%.

Dimming: The driver is phase-cut dimmable (down to 10%). Please reference the dimmer compatibility document (LEDLUM012).

Color Characteristics: CRI >80; CCT of 2700K or 4000K.

Optics: White acrylate PMMA diffuser lens.

Installation: Luminaire mounts to recessed outlet box.

Operating Temperature: -4°F to 104°F (-20°C to 40°C).

Listings: cETLus listed to UL1598 standards for dry locations.

Warranty: Standard 5-year luminaire warranty (LEDLUM002).

Note: Specifications subject to change without notice. IES files available online.

Ordering Guide

Item Number:

SURFACE	R	1A	/	XXX	120	T	8	XX	/	14	S	/	WH
Product Name	Shape R = Round	Generation 1A		Wattage 025 = 25 Watts	Voltage 120 = 120V	Dimming T = Phase-Cut Dimming	CRI 8 = >80	Color Temp (CCT) 27 = 2700K 40 = 4000K		Dimension 14 = 14 Inch	Mounting S = Surface		Color/Finish WH = White

Ordering Information

Item Number	Ordering Abbreviation	Power (W)	Input Voltage	Dimming	CRI	Color Temp (CCT)	Size	Total Fixture Lumens	LPW*
74263	SURFACER1A/025120T827/14S/WH	25	120	Phase-cut	>80	2700K	14”	1500	60
74264	SURFACER1A/025120T840/14S/WH	25	120	Phase-cut	>80	4000K	14”	1600	65

*LPW per LM79 report.
For further information and to learn more about utility rebates, contact your local SYLVANIA sales representative.

LEDVANCE LLC
200 Ballardvale Street
Wilmington, MA 01887 USA
Phone 1-800-LIGHTBULB (1-800-544-4828)
www.sylvania.com

SYLVANIA and LEDVANCE are registered trademarks.
All other trademarks are those of their respective owners.
Product Licensee of Trademark SYLVANIA in General Lighting.
Specifications subject to change without notice.

/sylvania /sylvania

© 2016 LEDVANCE

SYLVANIA Luminaires

ValueLED™ Exit Signs

Item #	
Type	
Project	
Notes	
Date	

Application

Available in red or green, the brightly lit SYLVANIA ValueLED Exit and Emergency Signs are slim, low profile exit sign lighting solutions that provide a crisp, clean look and the excellent energy-saving benefits of LED technology. These LED Exit and Exit Combo Signs with emergency battery backup are ideal for buildings, offices and a broad range of commercial facilities.

Benefits and Features

- Slim profile, lightweight, easy to install exit sign that replaces traditional incandescent and fluorescent exit signs
- Bright, energy-efficient LEDs provide energy savings up to 97%
- Universal mounting
- 6500K color temperature (combination versions only)
- CRI >80
- Offered in 0.5 watts (exit version only) and 2.2 watts (combination versions only)

Electrical

- 120/277VAC
- Power Factor >90%
- THD <20%

Rated Life

- 50,000 hours (L_{70})

Warranty

- 5-year

Ambient Operating Range

- 32°F to +104°F (0°C to +40°C)

Certifications and Listings

- cULus
- RoHS
- FCC
- Damp location rated

Installation

- Universal J Box mounting pattern
- Snap canopy for top or end mounting included

Wattage Comparison

Traditional Source	LED System Wattage	Energy Savings
2 x 24W halogen	2 x 1.1W	91%
15W incandescent	.5W	97%

Ordering Guide

Exit Signs

EXIT	1A	/	X	DV	/	U	/	WH	/	EM
Product Name EXIT = Exit Light	Generation 1A		Color R = Red G = Green	Voltage DV = Dual Voltage (120/277)		Mounting U = Universal		Color WH = White		Emergency EM = Emergency Back-Up

Combo Exit Signs

EXITCOMBO	1A	/	X	DV	THS	/	U	/	WH	/	EM
Product Name EXITCOMBO = Exit Combo Light	Generation 1A		Color R= Red G= Green	Voltage DV = Dual Voltage (120/277)	Combo Type THS = Twin Head Square		Mounting U = Universal		Color WH = White		Emergency EM = Emergency Back-Up

Ordering Information

Item Number	Ordering Abbreviation	Power (W)	Input Voltage	Letter Coloring	Total Fixture Lumens	CRI	CCT	Options
60761	EXIT1A/RDV/U/WH/EM	0.5	120/277	Red	4.2	–	–	Emergency Back-up
60762	EXIT1A/GDV/U/WH/EM	0.5	120/277	Green	4.1	–	–	Emergency Back-up
60759	EXITCOMBO1A/RDVTHS/U/WH/EM	2.2	120/277	Red	340	80	6500K	Emergency Back-up
60760	EXITCOMBO1A/GDVTHS/U/WH/EM	2.2	120/277	Green	340	80	6500K	Emergency Back-up

Physical Information

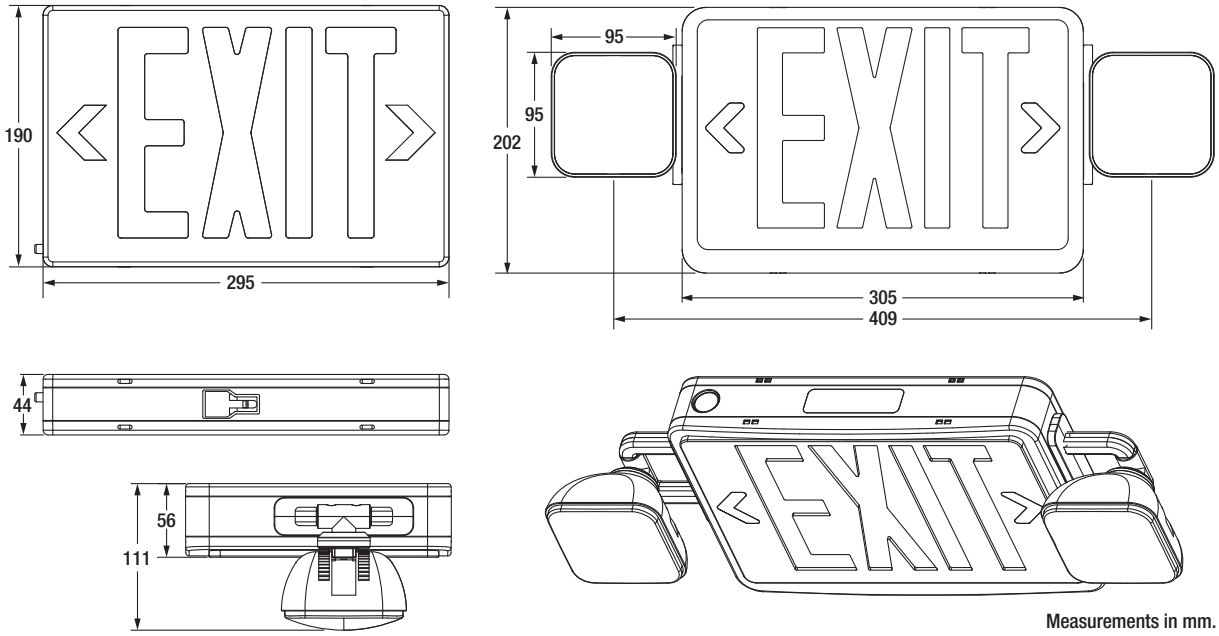

Measurements in mm.

Additional Specifications

- Built-in 1.2V 1000mAh Nickel cadmium battery for minimum 90 minutes emergency operation
- Maximum 24 hours for full recharge time
- Test switch and charge indicator

LEDVANCE LLC
200 Ballardvale Street
Wilmington, MA 01887 USA
Phone 1-800-LIGHTBULB (1-800-544-4828)
www.sylvania.com

SYLVANIA and LEDVANCE are registered trademarks.
All other trademarks are those of their respective owners.
Licensee of product trademark SYLVANIA in general lighting.
Specifications subject to change without notice.

/sylvania /sylvania

Name:
Email:
Phone:

© 2019 LEDVANCE LLC

SYLVANIA Luminaires

ValueLED™ Emergency Lights

Item #	
Type	
Project	
Notes	
Date	

Application

The brightly lit SYLVANIA ValueLED Emergency Lights are slim, low profile emergency lighting solutions that provide a crisp, clean look and the excellent energy-saving benefits of LED technology. These LED emergency lights are ideal for buildings, offices and a broad range of commercial facilities.

Benefits and Features

- Slim profile, lightweight, easy to install emergency light that replaces traditional incandescent
- Bright, energy-efficient LEDs provide energy savings up to 91%
- Surface mounting
- 6500K color temperature
- CRI >80
- Offered in 2.2 watts
- Energy savings up to 91%

Electrical

- 120/277VAC
- Power Factor >90%
- THD <20%

Rated Life

- 50,000 hours (L_{70})

Warranty

- 5-year

Ambient Operating Range

- 32°F to +104°F (0°C to +40°C)

Certifications and Listings

- cULus (UL 924 & CAN/CSA C22.2 No 141-10)
- RoHS
- FCC
- Damp location rated
- Certified in the CA Title 20 Appliance Efficiency Database for Small Battery Chargers

Installation

- Universal J Box mounting pattern

Wattage Comparison

Traditional Source	LED System Wattage	Energy Savings
2 x 24W halogen	2 x 1.1W	91%

Ordering Guide

Emergency Lights

EMLIGHT	1X	/	3	DV	TH	X	/	S	/	WH
Product Name EMLIGHT = Emergency Light	Generation 1A 1B		Wattage 3 = 3 Watts	Voltage DV = Dual Voltage (120/277)	Luminaire Type TH = Twin Head	Head Shape S = Square head R = Round head		Mounting S = Surface Mounting		Color WH = White

Ordering Information

Item Number	Ordering Abbreviation	Power (W)	Input Voltage	Total Fixture Lumens	CRI	CCT	Lamp Shape	Options
60763	EMLIGHT1A/3DVTHS/S/WH	2	120/277	200	80	6500K	Square	Emergency Back-up
60764	EMLIGHT1B/3DVTHR/S/WH	2	120/277	220	80	6500K	Round	Emergency Back-up

Physical Information

EMLIGHT1A

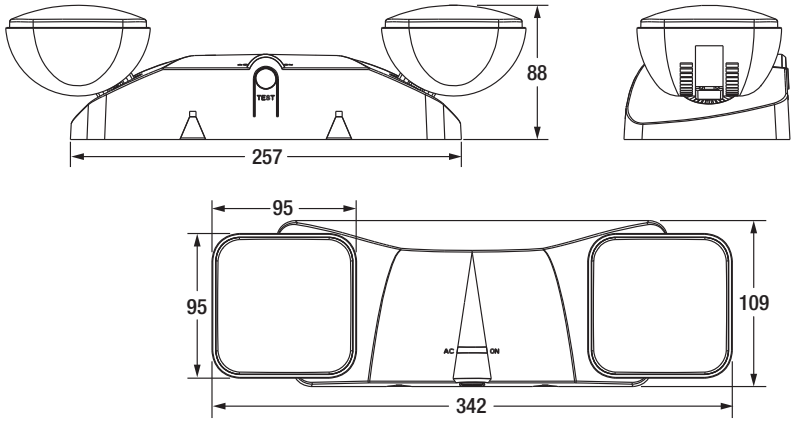

EMLIGHT1B

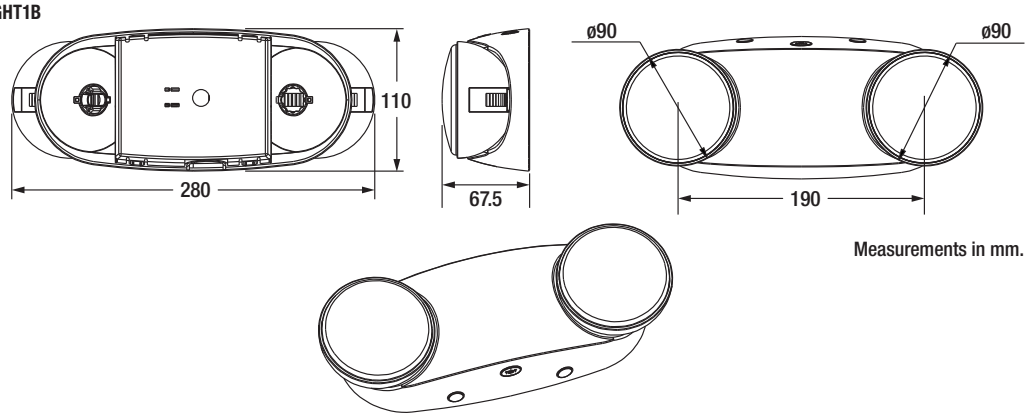

Measurements in mm.

Additional Specifications

- Built-in 1.2V 1000mAh Nickel cadmium battery for minimum 90 minutes emergency operation
- Maximum 24 hours for full recharge time
- Test switch and charge indicator

LEDVANCE LLC
200 Ballardvale Street
Wilmington, MA 01887 USA
Phone 1-800-LIGHTBULB (1-800-544-4828)
www.sylvania.com

Name:
Email:
Phone:

SYLVANIA and LEDVANCE are registered trademarks.
All other trademarks are those of their respective owners.
Licensee of product trademark SYLVANIA in general lighting.
Specifications subject to change without notice.

/sylvania /sylvania

© 2019 LEDVANCE LLC

SYLVANIA Luminaires

Shop Light

Item #	
Type	
Project	
Notes	
Date	

Application

The SYLVANIA Shop Light is designed to replace traditional fluorescent fixtures in residential applications. Easy to install, this luminaire is sold with mounting accessories including the relevant chains, hooks, and connectors. Offered with a built in five foot on/off chain, and linkable up to four units, the Shop Light provides uniform light distribution ideal for workshops, garages, and other general lighting applications.

Benefits and Features

- Easy installation with convenient plug
- ENERGY STAR® listed to maximize rebate opportunities
- Accessories included:
  - 4 foot: Chains, hooks, and brackets – 3 in1
  - 3 foot: Chains and hooks
- Durable aluminum housing with diffuse curved lens and 5 foot plug-in cord
- Up to 100 LPW
- 4000K color temperature
- CRI >80
- Offered in 3 foot (single tube 30W) and 4 foot (double tube 42W) versions
- Energy savings up to 39%
- Linkable:
  - 4 foot = Up to 4 items in a row
  - 3 foot = Up to 8 items in a row

Electrical

- The luminaire is designed to operate through 120VAC
- Power Factor >90%
- THD <20%
- Non-dimmable

Rated Life

- 50,000 hours (L_{70})

Warranty

- 5-year

Certifications and Listings

- cETLus
- RoHS
- FCC
- ENERGY STAR®

Wattage Comparison

Traditional Source	Traditional System Wattage	LED System Wattage	Energy Savings
2 x 32W T8	56	42	25%
2 x 28W T8	49	30	39%

Installation

- Luminaire mounts to recessed outlet box or can be surface or suspension mounted.
- Connector available for tandem wiring.

Ordering Guide

LEDSHOP	/	120	/	XX	8	40	/	XFT	/	G2
Product Name LEDSHOP = LED Shop Light		Voltage 120 = 120V		Wattage 42 = 42 Watts 30 = 30 Watts	CRI 8 = >80	Color Temp 40 = 4000K		Length 4 = 4 feet 3 = 3 feet		Generation G2 = Second Generation

Ordering Information

Item Number	Ordering Abbreviation	Power (W)	Base Type	Input Voltage (V)	Average Life (hrs)	CCT	Case Qty	Typical Lumens (lm)	CRI	Power Factor	Bulb Finish	ENERGY STAR®	T20	T24
61451	LEDSHOP/120/42840/4FT/G2	42	Plug in	120	50,000	4000K	6	4200	>80	>90%	Frosted	Yes	No	No
61452	LEDSHOP/120/30840/3FT	30	Plug in	120	50,000	4000K	6	3000	>80	>90%	Frosted	Yes	No	No

Photometric Data

Shop Light 4' 4200lm

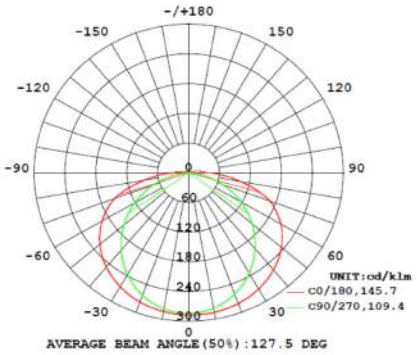

Shop Light 3' 3000lm

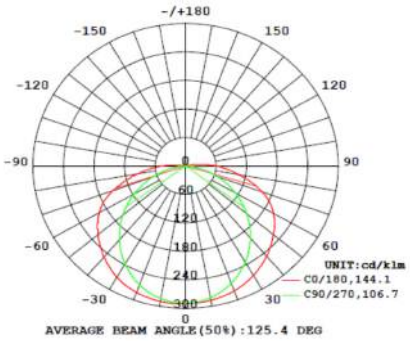

Physical Information

Luminaire Description	(A) Length (in)	(B) Width (in)	(C) Height (in)
LEDSHOP/120/42840/4FT/G2	47.7	4.25	1.22
LEDSHOP/120/30840/3FT	35.7	2.48	1.33

Shop Light 4'

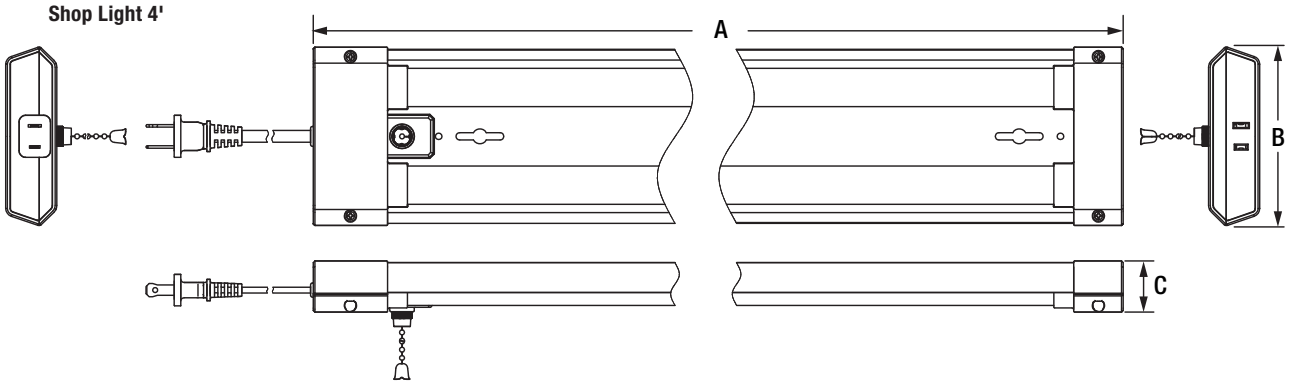

Shop Light 3'

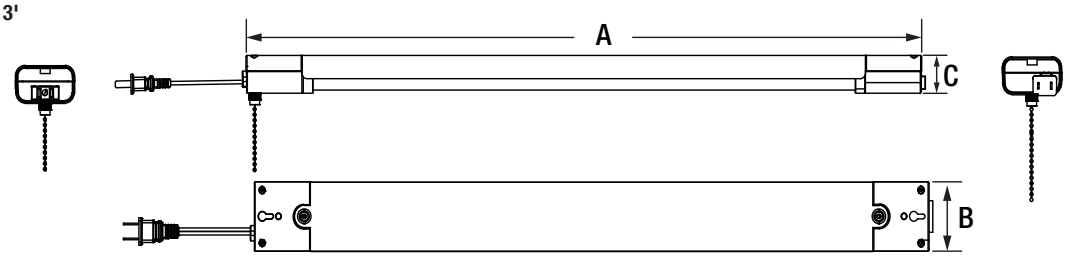

Additional Specifications

- Suitable for use in closets, compliant with NFPA 70, NEC section 410.16 (A)(3) and 410.16 (C)(5).

LEDVANCE LLC
200 Ballardvale Street
Wilmington, MA 01887 USA
Phone 1-800-LIGHTBULB (1-800-544-4828)
www.sylvania.com

SYLVANIA and LEDVANCE are registered trademarks.
All other trademarks are those of their respective owners.
Licensee of product trademark SYLVANIA in general lighting.
Specifications subject to change without notice.

/sylvania /sylvania

Name:

Email:

Phone:

© 2019 LEDVANCE LLC

SYLVANIA Luminaires

ValueLED™ Strip

Item #	
Type	
Project	
Notes	
Date	

Application

The SYLVANIA ValueLED Strip is ideal for many retrofit and new construction applications including education, manufacturing, low-bay, and general lighting. This CCT Selectable luminaire provides high quality light and flexibility.

Benefits and Features

- Easy to install and linkable for customizable lengths
- CCT Selectability greatly increases the versatility of this product family
- Offered in two lumen packages and one length
- Up to 110 LPW
- 3000K, 4000K, and 5000K CCT Selectable enabled through a switch located on the driver. (See “Additional Information” at the end of this document for further details.)
- CRI >80
- Offered in 4 foot 20 and 42 watt versions
- Energy savings up to 20%

Electrical

- 120-277VAC
- Power Factor >90%
- THD <20%

Construction

- Aluminum white shape polycarbonate with diffuse curved lens. The standard color is white.

Rated Life

- 50,000 hours (L_{70})

Warranty

- 5-year

Certifications and Listings

- cETLus
- RoHS
- FCC
- ENERGY STAR®

Wattage Comparison

Traditional Source	Traditional System Wattage	LED System Wattage	Energy Savings
1x25W Fluorescent	25	20	20%
2x28W Fluorescent	49	42	14%

Installation

- Luminaire mounts to recessed outlet box or can be surface or chain mounted (chain not included).
- Connector available for tandem wiring.

Ordering Guide

LEDSTRIP	X	/	UNV	/	XX	CCT3	/	4FT
Product Name LEDSTRIP = LED Linear Strip	Number of Tubes 1 = Single Tube 2 = Double Tube		Voltage UNV = 120-277V		Wattage 20 = 20W 42 = 42W	Color Temp CCT3 = 3 CCT Selectable		Length 4FT = 4 feet

Ordering Information

Item Number	Ordering Abbreviation	Power (W)	Input Voltage (V)	CRI	CCT	Total Fixture Lumens	LPW
61453	LEDSTRIP1/UNV/20CCT3/4FT	20	120-277	>80	3000, 4000, or 5000K	2200	110
61454	LEDSTRIP2/UNV/42CCT3/4FT	42	120-277	>80	3000, 4000, or 5000K	4500	107

Photometric Data

61453

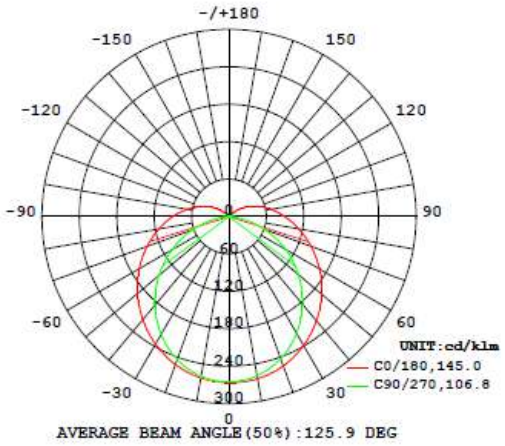

61454

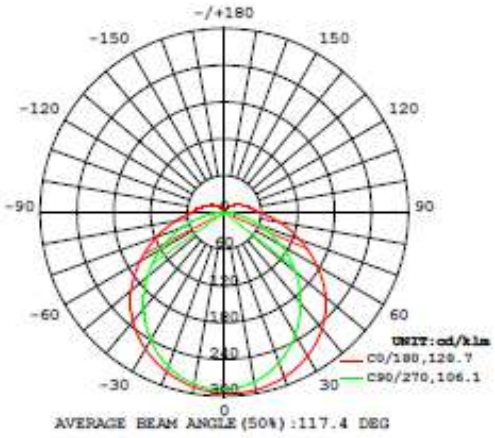

Physical Information

Luminaire Description	(A) Length (mm)	(B) Width (mm)	(C) Height (mm)
LEDSTRIP1 4FT	1212	48.5	58.5
LEDSTRIP2 4FT	1212	63.5	58.5

LEDSTRIP1 4FT

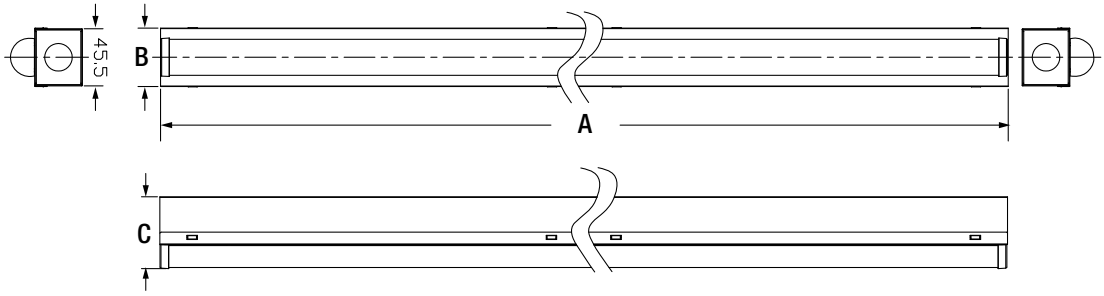

LEDSTRIP2 4FT

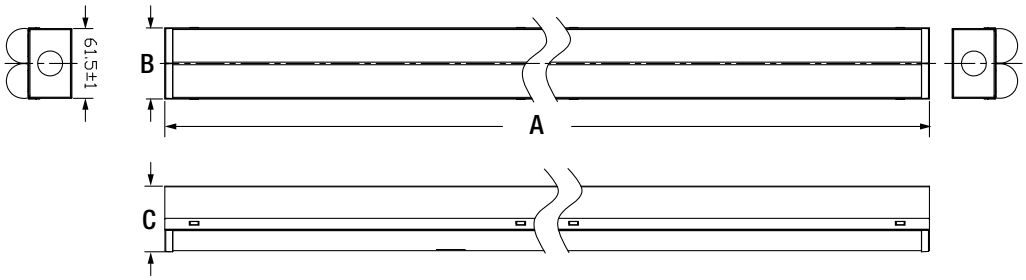

Additional Information

To select color temperature, slide the switch on the driver to 3000K, 4000K, or 5000K upon installation. Or select CCT (Wall Switch).

If selecting CCT mode, you can turn on/off normally, but you can also change the color through the wall switcher following the steps below:

- Switching On/off ≤4 seconds of interval, you can switch color directly through the wall switcher.
- Switching On/off ≥5 seconds of interval, driver will memorize the last color selected.

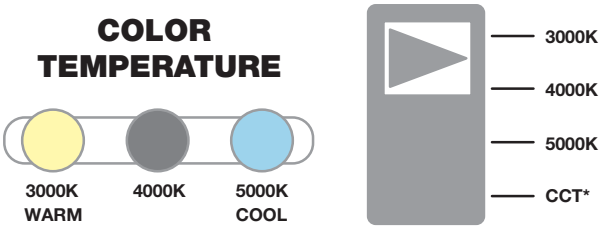

LEDVANCE LLC
200 Ballardvale Street
Wilmington, MA 01887 USA
Phone 1-800-LIGHTBULB (1-800-544-4828)
www.sylvania.com

SYLVANIA and LEDVANCE are registered trademarks.
All other trademarks are those of their respective owners.
Licensee of product trademark SYLVANIA in general lighting.
Specifications subject to change without notice.

/sylvania /sylvania

Name:
Email:
Phone:

© 2019 LEDVANCE LLC

SYLVANIA Luminaires

ValueLED™ Wrap Luminaire with Motion Sensor

Item #	
Type	
Project	
Notes	
Date	

Application

The SYLVANIA ValueLED Wrap Light maximizes the energy savings of LED technology by also adding an integrated motion sensor. Boasting a five year warranty, the ValueLED Wrap Luminaire is ideal in many retail, office, education, and low-bay applications.

Benefits and Features

- Modern, low profile form provides updates from traditional designs
- Integrated motion sensor optimizes energy savings
- Up to four units can be connected enabling customizable lengths
- Up to 94 LPW
- 4000K color temperature
- CRI >80
- Offered in 48 watts
- Integrated motion sensor (180° directional)
- Energy savings up to 32%

Electrical

- 120VAC
- Power Factor >90%
- THD <20%

Rated Life

- 50,000 hours (L_{70})

Warranty

- 5-year

Certifications and Listings

- cETLus
- RoHS
- FCC
- ENERGY STAR®

Wattage Comparison

Traditional Source	Traditional System Wattage	LED System Wattage	Energy Savings
2 x 32WT8	56	40	32%

Installation

- Luminaire is designed to be surface mounted or suspended.

Ordering Guide

LEDWRAP	120	PIR	48	8	40
Product Name LEDWRAP = LED Wrap Luminaire	Voltage 120 = 120V	Option PIR = Passive Infrared Sensor	Length 48 = 48"	CRI 8 = >80	Color Temp 40 = 4000K

Ordering Information

Item Number	Ordering Abbreviation	Power (W)	Input Voltage (V)	CRI	CCT	Total Fixture Lumens	LPW	Options
61455	LEDWRAP120PIR48840	48	120	> 80	4000K	4500	94	Integrated Motion Sensor (180° directional)

Photometric Data

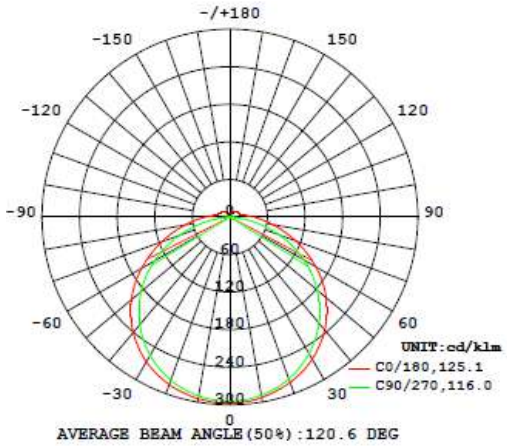

Physical Information

Luminaire Description	(A) Length (mm)	(B) Width (mm)	(C) Height (mm)
LEDWRAP	1212	127	34

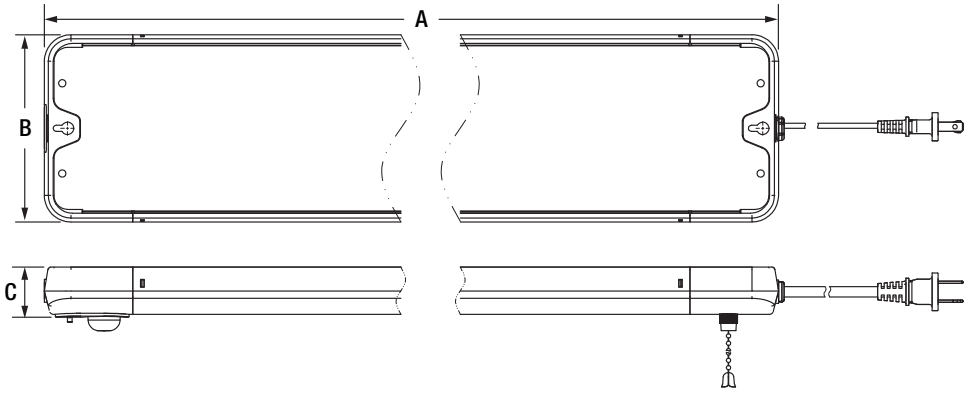

LEDVANCE LLC
200 Ballardvale Street
Wilmington, MA 01887 USA
Phone 1-800-LIGHTBULB (1-800-544-4828)
www.sylvania.com

Name:
Email:
Phone:

SYLVANIA and LEDVANCE are registered trademarks.
All other trademarks are those of their respective owners.
Licensee of product trademark SYLVANIA in general lighting.
Specifications subject to change without notice.

/sylvania /sylvania

© 2020 LEDVANCE LLC

SYLVANIA Luminaire

ValueLED™ Wide Selectable Wrap

Application

The SYLVANIA ValueLED Wide Selectable Wrap maximizes the energy savings of LED technology by also adding an integrated motion sensor. The wide body wrap provides an ample light distribution, and offers 3 color temperatures in one. With a five-year warranty, the ValueLED Wrap Luminaire is ideal in many retail, office, education, and low-bay applications.

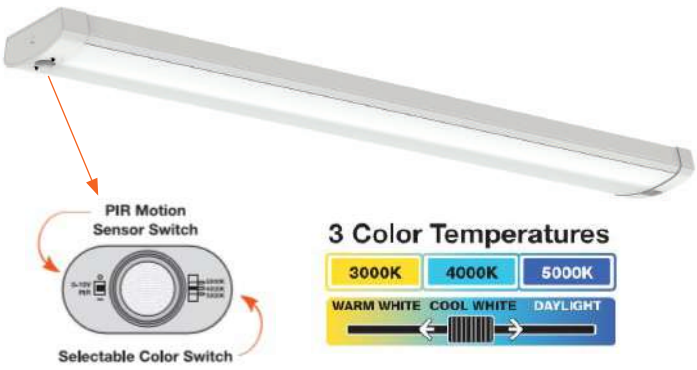

Benefits and Features

- Modern, low profile form provides updates from traditional designs
- 3 Color Selectable: 3000K, 4000K & 5000K color temperature in one product
- Linkable: up to 8 units
- PIR motion sensor integrated
- Wide Body
- Universal Voltage
- Up to 115 LPW
- CRI >80
- Offered in 48 watts
- Uniform, glare free illumination distribution
- Energy savings up to 14%
- Dimmable

Electrical

- 120-277V
- Power Factor 90%
- THD 25%

Rated Life

- 50,000 hours (L_{70})

Warranty

- 5-year

Ambient Operating Range

- -4°F to +176°F (-20°C to +80°C)

Certifications and Listings

- cETLus
- RoHS
- FCC
- DLC

Wattage Comparison

Traditional Source	Traditional System Wattage	LED System Wattage	Energy Savings
Fluorescent	56W	48W	14%

Installation

- Direct wire
- Linking cord included

Specifications and Certifications

Catalog #	Type
Project	
Comments	
Prepared by	

Ordering Guide

LEDWIDEWRAP	/	48	UNV	/	D	/	8	/	SC2	/	WH	/	M
Product Name LED Wide Wrap		Power 48 = 48 Watts	Voltage UNV = Universal (120-277V)		Dimmable		CRI 8 = 80		Selectable Color Temperature 3000K/4000K/5000K		Finish WH = White		M = Motion Sensor

Ordering Information

Item Number	Ordering Abbreviation	Power (W)	Base Type	Replaces	Input Voltage (V)	Average Life (hrs)	CCT	Case Qty	Typical Lumens (lm)	CRI	Power Factor	Bulb Finish	DLC	T20	T24
61793	LEDWIDEWRAP/48UNV/D/8/SC2/WH/M	48W	Hardwire	56W	120-277V	50,000	3000K 4000K 5000K	8	5500	>80	>90%	Frosted	Yes	No	No

Energy Savings

Basic Product Description	LED Life (hrs)	LED Lumens	Similar Incandescent (hrs)	Incandescent Lumens	Watts Saved	Energy Savings*	LED Life vs Incandescent
LEDWIDEWRAP/48UNV/D/8/SC2/WH/M	50,000	5500	2000	5600	8	$44	25x

*Energy savings over life of lamp calculated at $0.11/kWh

Physical Information

Lamp Description	Length (in)	Width (in)	Height (in)
LEDWIDEWRAP/48UNV/D/8/SC2/WH/M	47.75	7	3.13

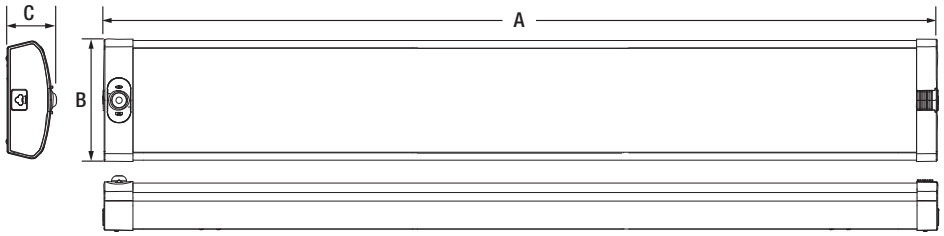

Photometric Data

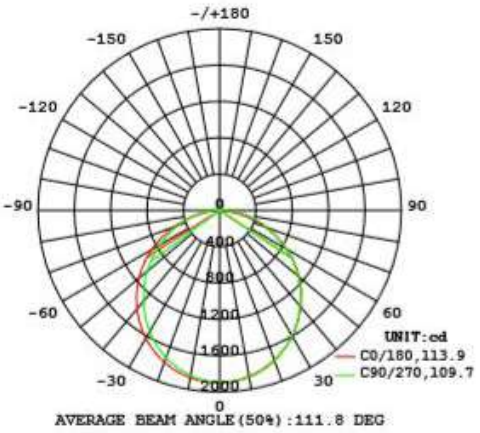

LEDVANCE LLC
200 Ballardvale Street
Wilmington, MA 01887 USA
Phone 1-800-LIGHTBULB (1-800-544-4828)
www.sylvania.com

SYLVANIA and LEDVANCE are registered trademarks.
All other trademarks are those of their respective owners.
Licensee of product trademark SYLVANIA in general lighting.
Specifications subject to change without notice.

/sylvania /sylvania

© 2020 LEDVANCE LLC

SYLVANIA Luminaire

ValueLED™ WRAPLIGHT

Application

The SYLVANIA ValueLED WRAPLIGHT maximizes the energy savings of LED technology. Boasting a five-year warranty, the ValueLED WRAPLIGHT Luminaire is ideal in many retail, office, education, and low-bay applications.

Benefits and Features

- Modern, low profile form provides updates from traditional designs
- Up to eight units can be connected, enabling customizable lengths
- Up to 104 LPW
- 4000K color temperature
- CRI >80
- Offered in 48 watts
- Uniform, glare free illumination distribution
- Energy savings up to 32%

Electrical

- 120-277VAC
- Power Factor 90%
- THD 20%

Rated Life

- 50,000 hours (L_{70})

Warranty

- 5-year

Ambient Operating Range

- -4°F to +140°F (-20°C to +60°C)

Certifications and Listings

- cETLus
- RoHS
- FCC
- DLC

Wattage Comparison

Traditional Source	Traditional System Wattage	LED System Wattage	Energy Savings
Fluorescent	56W	48W	32%

Installation

- Direct wire
- Link units using the linking cord provided

Specifications and Certifications

Specification Data

Catalog #	Type
Project	
Comments	
Prepared by	

Ordering Guide

LEDWRAPMOD	/	48	UNV	8	40	/	48	/	WH
Product Name LED WRAPLIGHT MOD = Modern		Wattage 48 Watts	Voltage UNV = Universal (120-277V)	CRI 8 = 80	Color Temperature 40 = 4000K		Length 48 Inches		Color WH = White

Ordering Information

Item Number	Ordering Abbreviation	Power (W)	Base Type	Replaces	Input Voltage (V)	Average Life (hrs)	CCT	Case Qty	Typical Lumens (lm)	CRI	Power Factor	Bulb Finish	ENERGY STAR®	DLC	T20	T24
60843	LEDWRAPMOD/48UNV840/48/WH	48	Hardwire	56W	120-277	50,000	4000K	8	5000	>80	>90%	Frosted	No	Yes	No	No

Energy Savings

Basic Product Description	LED Life (hrs)	LED Lumens	Similar Incandescent (hrs)	Incandescent Lumens	Watts Saved	Energy Savings*	LED Life vs Incandescent
LEDWRAPMOD/48UNV840/48/WH	50,000	5000	2000	5600	8W	$44	25X

*Energy savings over life of lamp calculated at $0.11/kWh

Physical Information

Luminaire Description	Length (A)	Width (B)	Height (C)
LEDWRAPMOD/48UNV840/48/WH	47.2" (1199mm)	5.24" (133.1mm)	2.08" (52.8mm)

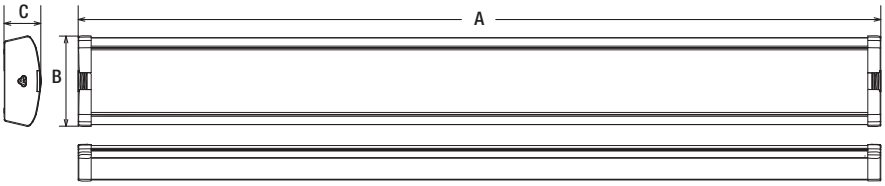

Photometric Information

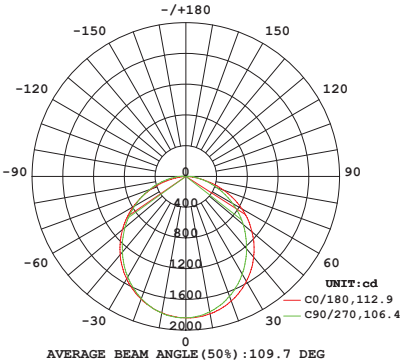

LEDVANCE LLC
200 Ballardvale Street
Wilmington, MA 01887 USA
Phone 1-800-LIGHTBULB (1-800-544-4828)
www.sylvania.com

SYLVANIA and LEDVANCE are registered trademarks.
All other trademarks are those of their respective owners.
Licensee of product trademark SYLVANIA in general lighting.
Specifications subject to change without notice.

/sylvania /sylvania

© 2020 LEDVANCE LLC

SYLVANIA

Vintage Sconce Family

Catalog #	Type
Project	
Notes	
Date	
Prepared by	

Weymouth

Dover

Easton

Product Features

Trending antique black fixtures are perfect for doorways, porches, and entry spaces. Reflecting designs seen in high-end home furnishing stores, these retro-industrial style fixtures complement the look of almost any outdoor space or entry space, as well as restaurant and hospitality applications. Perfect for single use, pairs or multiples, these fixtures provide an elegant and classic addition to any outdoor space. Each 11-inch fixture ships with one highly efficient LED A19 clear filament bulb.

Specifications

Construction: Post painted aluminum body. The standard finish is matte black.

Electrical: The luminaire is designed to operate through the 120 VAC voltage.

Installation: Luminaire mounts to recessed outlet box.

Applications:

Commercial: hospitality and retail applications.

Residential: doorways, porches and entry spaces.

Listings:

Fixture: cETLus listed to UL1598 standards and suitable for wet locations.

Included Bulb: cULlisted to UL1598 and suitable for wet locations, CEC Title 20 Compliant.

Note: Specifications subject to change without notice.

*For lamp only

Ordering Information

Item Number	Ordering Abbreviation	Product Name	Input Voltage	Dimming	Finish	Included Bulbs
60121	FCTRYSCONCE/120/7/BL/VOD/CC	Weymouth	120V	Phase-Cut	Matte Black	1 x 800 Lumen A19 Bulb
60122	RSTFCTRYSCONCE/120/7/BL/VOD/CC	Dover	120V	Phase-Cut	Matte Black	1 x 800 Lumen A19 Bulb
60123	PANFCTRYSCONCE/120/7/BL/VOD/CC	Easton	120V	Phase-Cut	Matte Black	1 x 800 Lumen A19 Bulb

For further information and to learn more about utility rebates, contact your local SYLVANIA sales representative.

LEDVANCE LLC
200 Ballardvale Street
Wilmington, MA 01887 USA
Phone 1-800-LIGHTBULB (1-800-544-4828)
www.sylvania.com

SYLVANIA and LEDVANCE are registered trademarks.
All other trademarks are those of their respective owners.
Licensee of product trademark SYLVANIA in general lighting.
Specifications subject to change without notice.

/sylvania /sylvania

© 2018 LEDVANCE LLC

SYLVANIA

Vintage Semi-Flush Mount Family

Catalog #	Type
Project	
Notes	
Date	
Prepared by	

Essex

Beverly

Lincoln

Plymouth

Product Features

These trendy, antique black, semi-flush mount fixtures provide a vintage inspired option to light kitchens, gathering areas, hallways, and foyers as well as hospitality applications. Similar to designs seen in high-end home furnishing stores and lighting showrooms, these versatile fixtures complement the look of almost any space and pair nicely with pendant lights. Seeded glass and metal detailing provide for an elegant and classic appearance. Each fixture ships with a highly efficient LED clear A19 or ST19 filament bulb (unless otherwise noted).

Specifications

Construction: Post painted aluminum with seeded or clear glass shade. The color offering is matte black.

Electrical: The luminaire is designed to operate through the 120 VAC voltage.

Installation: Luminaire mounts to recessed outlet box.

Applications:

Commercial: hospitality and retail applications.

Residential: kitchen, bedroom, living and working areas.

Listings:

Fixture: cETLus listed to UL1598 standards and suitable for dry locations.

Included Bulb: cULlisted to UL1993 and suitable for dry locations, CEC Title 20 Compliant.

Note: Specifications subject to change without notice.

*For lamp only

Ordering Information

Item Number	Ordering Abbreviation	Product Name	Input Voltage	Dimming	Canopy Diameter	Finish	Included Bulbs
60115	CAGEFLUSH/120/86SG/BL/VID/CC	Essex	120V	Phase-Cut	4.5in	Matte Black	1 x 800 Lumen A19 Bulb
60116	BARNCAGEFLUSH/120/9SG/BL/VID/CC	Beverly	120V	Phase-Cut	4.5in	Matte Black	1 x 800 Lumen A19 Bulb
60120	BARNFLUSH/120/8CG/BL/VID/CC	Lincoln	120V	Phase-Cut	4.5in	Matte Black	1 x 800 Lumen ST19 Bulb
60027	JELLYJARFLUSH/120/6CG/BL/VID	Plymouth	120V	Phase-Cut	4.5in	Matte Black	None

For further information and to learn more about utility rebates, contact your local SYLVANIA sales representative.

LEDVANCE LLC
200 Ballardvale Street
Wilmington, MA 01887 USA
Phone 1-800-LIGHTBULB (1-800-544-4828)
www.sylvania.com

SYLVANIA and LEDVANCE are registered trademarks.
All other trademarks are those of their respective owners.
Licensee of product trademark SYLVANIA in general lighting.
Specifications subject to change without notice.

/sylvania /sylvania

© 2018 LEDVANCE LLC

SYLVANIA

Vintage Flush Mount Family

Catalog #	Type
Project	
Notes	
Date	
Prepared by	

Wellesley

Andover

Cambridge

Product Features

These trendy, antique black, drum-style fixtures provide a vintage-inspired option to light kitchens, gathering areas, hallways, and foyers as well as restaurants and hospitality applications. Similar to designs seen in high-end home furnishing stores, these versatile fixtures complement the look of almost any space and pair nicely with pendant lights. Seeded glass and metal detailing provide for an elegant and classic appearance. Each 11-inch fixture ships with two A19 highly efficient LED clear filament bulbs.

Specifications

Construction: Post painted aluminum with seeded glass shade. The color offering is matte black.

Electrical: The luminaire is designed to operate through the 120 VAC voltage.

Installation: Luminaire canopy mounts to recessed outlet box.

Applications:

Commercial: hospitality and retail applications.

Residential: kitchen, bedroom, living and working areas.

Listings:

Fixture: cETLus listed to UL1598 standards and suitable for dry locations.

Included Bulb: cULlisted to UL1598 and suitable for dry locations, CEC Title 20 Compliant.

Note: Specifications subject to change without notice.

*For lamp only

Ordering Information

Item Number	Ordering Abbreviation	Product Name	Input Voltage	Dimming	Canopy Diameter	Finish	Included Bulbs
60124	MTLDRUMFLUSH/120/11SG/BL/VID/CC	Wellesley	120V	Phase-Cut	11in	Matte Black	2 x 800 Lumen A19 Bulbs
60126	ANTDRUMFLUSH/120/11SG/BL/VID/CC	Andover	120V	Phase-Cut	11in	Matte Black	2 x 800 Lumen A19 Bulbs
60125	RINGDRUMFLUSH/120/11SG/BL/VID/CC	Cambridge	120V	Phase-Cut	11in	Matte Black	2 x 800 Lumen A19 Bulbs

For further information and to learn more about utility rebates, contact your local SYLVANIA sales representative.

LEDVANCE LLC
200 Ballardvale Street
Wilmington, MA 01887 USA
Phone 1-800-LIGHTBULB (1-800-544-4828)
www.sylvania.com

SYLVANIA and LEDVANCE are registered trademarks.
All other trademarks are those of their respective owners.
Licensee of product trademark SYLVANIA in general lighting.
Specifications subject to change without notice.

/sylvania /sylvania

© 2018 LEDVANCE LLC

SYLVANIA Luminaires
LED Round Flush Mount

Catalog #	Type
Project	
Notes	
Date	
Prepared by	

Product Features

The Surface Mount Series are environmentally preferable LED alternatives to traditional CFL or Incandescent luminaires, offering up to 87% in energy savings. Ideal in place of traditional luminaires, or as new installations, the Flush Mount Luminaires can be used in residential, educational, property management or hospitality applications.

The LED Round Flush Mount is offered in multiple sizes, is easy to install and provides soft, uniform illumination for universal applications. SYLVANIA luminaires assure optimum light engine performance for extended service and rated life (≥50,000 hours L_{70})

Specifications

Weight: 10": 1.72lbs (.78kg) 12": 2.67lbs (1.21kg)

Construction: Aluminum back plate with a brushed nickel finish and an acrylate/PMMA lens cover. The standard finish is brushed nickel.

LED System: LED system with a life rating of ≥50,000 hours at L_{70} @25°C. Luminaire efficacy up to 67 LPW.

Electrical: Offered in 15 Watts, the luminaire is designed to operate at 120V with driver on board . The power factor is ≥80% and THD is ≤20%.

Dimming: The driver is phase-cut dimmable (down to 10%).

Color Characteristics: CRI>80; CCT of 3000K or 4000K

Optics: White acrylate PMMA diffuser lens.

Installation: Luminaire mounts to recessed outlet box.

Operating Temperature: -4°F to +104°F (-20°C to +40°C)

Listings: cETLus listed to UL1598 standards and suitable for dry locations.

Note: Suitable for use in closets, compliant with NFPA 70, NEC section 410.16 (A)(3) and 410.16 (C)(5).

Warranty: Standard 5-year luminaire warranty (LEDLUM001).

Note: Specifications subject to change without notice.

Ordering Information

Item Number	Ordering Abbreviation	Power (W)	Input Voltage	Dimming	CRI	Color Temp (CCT)	Total Fixture Lumens	LPW	Size (in)	Shape
71403	LEDFLUSHRND10IN15DIM830BN	15	120V	Phase-Cut	>80	3000K	1000	67	10	Round
71404	LEDFLUSHRND10IN15DIM840BN	15	120V	Phase-Cut	>80	4000K	1000	67	10	Round
71405	LEDFLUSHRND12IN15DIM830BN	15	120V	Phase-Cut	>80	3000K	1000	67	12	Round
71406	LEDFLUSHRND12IN15DIM840BN	15	120V	Phase-Cut	>80	4000K	1000	67	12	Round

For further information and to learn more about utility rebates, contact your local SYLVANIA sales representative.

LEDVANCE LLC
200 Ballardvale Street
Wilmington, MA 01887 USA
Phone 1-800-LIGHTBULB (1-800-544-4828)
www.sylvania.com

SYLVANIA and LEDVANCE are registered trademarks.
All other trademarks are those of their respective owners.
Licensee of product trademark SYLVANIA in general lighting.
Specifications subject to change without notice.

/sylvania /sylvania

© 2019 LEDVANCE

SYLVANIA Luminaires

Surface Mount Series

Catalog #	Type
Project	
Notes	
Date	
Prepared by	

Surface Mount

Square Flush Mount

Drum Flush Mount

Flush Mount Cloud w/Trim

Round Flush Mount

Product Features

The SYLVANIA integrated LED flush mount fixture portfolio is a perfect fit for residential, hospitality, and commercial spaces. Match existing traditional or new modern look when illuminating hallways, offices, bedrooms, living rooms, and other general lighting applications. These ENERGY STAR® qualified fixtures provide up to 1800 lumens of warm/bright light, equivalent to that of up to a 100 watt incandescent bulb.

Family Features:

- Easy installation
- Maintenance free
- 120V
- Dimmable (phase-cut)
- CRI 80+

Wattage Comparison Chart

Traditional Source	Traditional System Wattage	LED System Wattage	Energy Savings
1x32W CFL	36	25	31%
100W Incandescent	100	25	75%

Note: Suitable for use in closets, compliant with NFPA 70, NEC section 410.16 (A)(3) and 410.16 (C)(5).

*Applies to all fixtures except 72517

Ordering Information

Item Number	Ordering Abbreviation	Family Name	Power (W)	Color Temp (CCT)	Size	Total Fixture Lumens	LPW*
74305	LEDFLUSHRND/11IN16/DIM/827/WH	11" Surface Mount	17.5	2700K	11"	1000	57
74306	LEDFLUSHRND/11IN16/DIM/840/WH	11" Surface Mount	17.5	4000K	11"	1200	68
74263	SURFACER1A/025120T/827/14S/WH	14" Surface Mount	25	2700K	14"	1500	60
74264	SURFACER1A/025120T/840/14S/WH	14" Surface Mount	25	4000K	14"	1600	65
71500	LEDFLUSHDRM/11IN15/DIM/830/WH	11" Drum Flush	15	3000K	11"	1000	66
71505	LEDFLUSHDRM/11IN15/DIM/840/WH	11" Drum Flush	15	4000K	11"	1000	66
74303	LEDFLUSHSQ/11IN16/DIM/827/WH	11" Square Flush	17.5	2700K	11"	1000	66
74304	LEDFLUSHSQ/11IN16/DIM/840/WH	11" Square Flush	17.5	4000K	11"	1000	66
71403	LEDFLUSHRND/10IN15/DIM/830/BN	10" Round Flush Mount	15	3000K	10"	1000	66
71404	LEDFLUSHRND/10IN15/DIM/840/BN	10" Round Flush Mount	15	4000K	10"	1000	66
71405	LEDFLUSHRND/12IN15/DIM/830/BN	12" Round Flush Mount	15	3000K	12"	1000	66
71406	LEDFLUSHRND/12IN15/DIM/840/BN	12" Round Flush Mount	15	4000K	12"	1000	66
74307	LEDFLUSHRNDTRM/11IN20/DIM/827/WH	11" Flush Mount Cloud with Trim	21	2700K	11"	1000	50
74308	LEDFLUSHRNDTRM/11IN20/DIM/840/WH	11" Flush Mount Cloud with Trim	21	4000K	11"	1200	60

*LPW per LM79 report
For further information and to learn more about utility rebates, contact your local SYLVANIA sales representative.

LEDVANCE LLC
200 Ballardvale Street
Wilmington, MA 01887 USA
Phone 1-800-LIGHTBULB (1-800-544-4828)
www.sylvania.com

SYLVANIA and LEDVANCE are registered trademarks.
All other trademarks are those of their respective owners.
Licensee of product trademark SYLVANIA in general lighting.
Specifications subject to change without notice.

/sylvania /sylvania

© 2019 LEDVANCE LLC

SYLVANIA

Vintage Pendant Family

Catalog #	Type
Project	
Notes	
Date	
Prepared by	

Lowell

Hudson

Brookline

Manchester

Product Features

Achieve the vintage-industrial look with pendant lights that are perfect for kitchens, gathering areas, hallways, foyers, retail spaces, restaurants and hospitality applications. Similar to designs seen in high-end home furnishing stores, these retro-industrial pendants are perfect for use as singles or multiples to provide an elegant and classic addition to almost any space. Each pendant ships with one highly efficient LED A19 or ST19 clear filament bulb (unless otherwise noted).

Specifications

Construction: Post painted aluminum canopy, 3.5ft adjustable cord with rubber coating or 10ft cord with plug. The shade is either post painted aluminum or clear glass. The color offering is matte black.

Electrical: The luminaire is designed to operate through the 120 VAC voltage.

Installation: Luminaire canopy mounts to recessed outlet box.

Applications:

Commercial: hospitality and retail applications.

Residential: kitchen, bedroom, living and working areas.

Listings:

Fixture: cETLus listed to UL1598 standards and suitable for dry locations.

Included Bulb: cULlisted to UL1598 and suitable for dry locations, CEC Title 20 Compliant.

Note: Specifications subject to change without notice.

*For lamp only

Ordering Information

Item Number	Ordering Abbreviation	Product Name	Input Voltage	Dimming	Cord Length	Canopy Diameter	Finish	Included Bulbs
60114	CAGEPENDANT/12030/CG/BL/VID/CC	Lowell	120V	Phase-Cut	42in	4.5in	Matte Black	1 x 800 Lumen ST19 Bulbs
60029	CAGEPENDANTPLG/12030/CG/BL/VID	Lowell - Plug	120V	Phase-Cut	120in	–	Matte Black	None
60117	FCTYPENDANT/12009/CG/BL/VID/CC	Hudson	120V	Phase-Cut	42in	4.5in	Matte Black	1 x 800 Lumen A19 Bulbs
60113	BELLPENDANT/12030/CG/BL/VID/CC	Brookline	120V	Phase-Cut	42in	4.5in	Matte Black	1 x 800 Lumen ST19 Bulbs
60028	CONEPENDANTPLG/12030/CG/BL/VID	Manchester - Plug	120V	Phase-Cut	120in	–	Matte Black	None

For further information and to learn more about utility rebates, contact your local SYLVANIA sales representative.

LEDVANCE LLC
200 Ballardvale Street
Wilmington, MA 01887 USA
Phone 1-800-LIGHTBULB (1-800-544-4828)
www.sylvania.com

SYLVANIA and LEDVANCE are registered trademarks.
All other trademarks are those of their respective owners.
Licensee of product trademark SYLVANIA in general lighting.
Specifications subject to change without notice.

/sylvania /sylvania

© 2018 LEDVANCE LLC

SYLVANIA Luminaires

Slim Convertible LED Undercabinet Light

Catalog #	Type
Project	
Notes	
Date	
Prepared by	

Product Features

The Undercabinet are environmentally preferable LED alternatives to traditional fluorescent luminaires, offering up to 77% in energy savings. Ideal in place of traditional luminaires, or as new installations, the Undercabinet Luminaires can be used in residential, educational, property management or hospitality applications.

The Slim Convertible LED Undercabinet Light is offered in multiple lengths to accommodate most standard cabinet sizes. The versatile design easily mounts to the underside of cabinets and can be used in both direct wire or plug in applications. LEDVANCE luminaires assure optimum light engine performance for extended service and rated life (≥35,000 hours L_{70}).

Specifications

Weight: 9 ": 1lbs (.45kg) 12": 1lbs (.45kg)
18": 1.19lbs (.54kg) 24": 1.34lbs (.61kg)

Construction: Steel back plate with a white powder coating finish, plastic end caps and an acrylate/PMMA lens. The standard color is white.

LED System: LED system with a life rating of ≥35,000 hours at L_{70} @25°C. Luminaire efficacy up to 82 LPW.

Electrical: Offered in 4.5, 6, 8, and 10 Watts, the luminaire is designed to operate at 120V with driver on board . The power factor is ≥90% and THD is ≤20%.

Dimming: The driver is phase-cut dimmable (down to 10%).

Color Characteristics: CRI>80; CCT of 3000K

Optics: White acrylate PMMA diffuser lens.

Installation: Luminaire is surfaced mounted with direct wire and plug in capabilities.

Operating Temperature: 32°F to +104°F (0°C to +40°C)

Listings: cETLus listed to UL1598 standards.

Warranty: Standard 5-year luminaire warranty (LEDLUM001).

Note: Specifications subject to change without notice.

Ordering Information

Item Number	Ordering Abbreviation	Power (W)	Input Voltage	Dimming	CRI	Color Temp (CCT)	Total Fixture Lumens*	LPW*	Size (in)
74347	LEDSLIMUCCONVER9IN	4.5	120V	Phase-Cut	>80	3000K	352	82	9
74346	LEDSLIMUCCONVER12IN	6	120V	Phase-Cut	>80	3000K	406	71	12
74345	LEDSLIMUCCONVER18IN	8	120V	Phase-Cut	>80	3000K	626	82	18
74344	LEDSLIMUCCONVER24IN	10	120V	Phase-Cut	>80	3000K	756	78	24

*Lumens and LPW per LM79 report.
For further information and to learn more about utility rebates, contact your local SYLVANIA sales representative.

LEDVANCE LLC
200 Ballardvale Street
Wilmington, MA 01887 USA
Phone 1-800-LIGHTBULB (1-800-544-4828)
www.sylvania.com

SYLVANIA and LEDVANCE are registered trademarks.
All other trademarks are those of their respective owners.
Licensee of product trademark SYLVANIA in general lighting.
Specifications subject to change without notice.

/sylvania /sylvania

© 2017 LEDVANCE

SYLVANIA Luminaires

Shop Light

Catalog #

Type

Project

Notes

Date

Dimensions

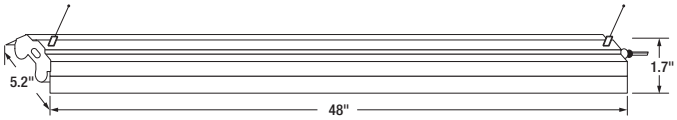

Product Features

- Linkable up to five lights
- Durable plastic construction
- Instant-ON, glare-free illumination
- Easy installation with convenient plug
- Suspension or surface mounting

Specifications

Weight: 3.2 lbs (1.5kg)

Construction: Plastic housing with diffuse curved lens and 4ft cord. The standard color is white.

LED System: LED system with a life rating of >50,000 hours at L_{70} @ 25°C. Luminaire efficacy up to 100 LPW.

Electrical: Offered in 40 watts, the luminaire is designed to operate at 120VAC. The LED driver is a constant current device. The power factor is ≥90% and THD is ≤20%.

Color Characteristics: CRI>80; CCT of 4000K.

Optics: Curved diffuse lens.

Operating Temperature: -13°F to +104°F (-25°C to +40°C)

Listings: cETLus listed, dry rated.

Warranty: Standard 5-year warranty.

Note: Specifications subject to change without notice.

Ordering Information

Item Number	Ordering Abbreviation	System Watts	CRI	Color Temp (CCT)	Lumens	LPW	Input Voltage
60131	SHPLGHT/40120/48PL/WH/PID	40	80	4000K	4000	100	120

LEDVANCE LLC
200 Ballardvale Street
Wilmington, MA 01887 USA
Phone 1-800-LIGHTBULB (1-800-544-4828)
www.sylvania.com

SYLVANIA and LEDVANCE are registered trademarks.
All other trademarks are those of their respective owners.
Licensee of product trademark SYLVANIA in general lighting.
Specifications subject to change without notice.

/sylvania /sylvania

© 2018 LEDVANCE LLC

SYLVANIA Luminaires

Hook Light

Catalog #

Type

Project

Notes

Date

Product Features

- Good uniformity of color with a CRI>80.
- Even light distribution without glare.
- Convenient mounting bracket or hook for easy portability and use.
- Light where you need it with attached 6ft cord.

Applications: Closets, utility rooms, under stairs or cabinets

Specifications

Dimensions:
Product: Length: 12" Diameter: 1"
Hook: Length: 2.4"
Bracket: Length: 2"
Cord: 72"

Weight: 3.2 lbs (1.5kg)

Construction: Plastic housing with diffuse curved lens and 6ft cord. The standard color is white.

LED System: LED system with a life rating of >30,000 hours at L_{70} @ 25°C. Luminaire efficacy up to 100 LPW.

Electrical: Offered in 5 watts, the luminaire is designed to operate at 120VAC. The LED driver is a constant current device. The power factor is ≥90% and THD is ≤20%.

Color Characteristics: CRI>80; CCT of 4000K.

Optics: Curved diffuse lens.

Operating Temperature: -13°F to +104°F (-25°C to +40°C)

Listings: cETLus listed, dry rated.

Warranty: Standard 5-year warranty.

Note: Specifications subject to change without notice.

Ordering Information

Item Number	Ordering Abbreviation	Size	System Watts	CRI	Color Temp (CCT)	Lumens	LPW	Input Voltage
60025	TBKT500L/5120840/12PL/WH/PID	1'	5	80	4000K	500	100	120

LEDVANCE LLC
200 Ballardvale Street
Wilmington, MA 01887 USA
Phone 1-800-LIGHTBULB (1-800-544-4828)
www.sylvania.com

SYLVANIA and LEDVANCE are registered trademarks.
All other trademarks are those of their respective owners.
Licensee of product trademark SYLVANIA in general lighting.
Specifications subject to change without notice.

/sylvania /sylvania

© 2018 LEDVANCE LLC

SYLVANIA
Luminaires
Remote

Linear High Bay 1A/Garage Remote

71758 – Sensor Remote

Linear High Bay 1A

Default Settings
Sensitivity: 100%
Stand-by time: 5 minutes
Lux: Disabled
Dimming level: 10%
Dimming time: 60 min

For more details please refer to Linear High Bay Cut Sheet or the Sensor Remote Cut Sheet

Garage

Default Settings
Sensitivity: 100%
Stand-by time: 5 minutes
Lux: 50LUX/5fc
Dimming level: 10%
Dimming time: Infinite (never turns off)

For more details please refer to Garage Cut Sheet or the Sensor Remote Cut Sheet

SYLVANIA
Luminaires
Vapor Tight Accessories

Vapor Tight Remote

74310 - Vapor Tight Sensor Remote
(Compatible with **VAPOR1A**)

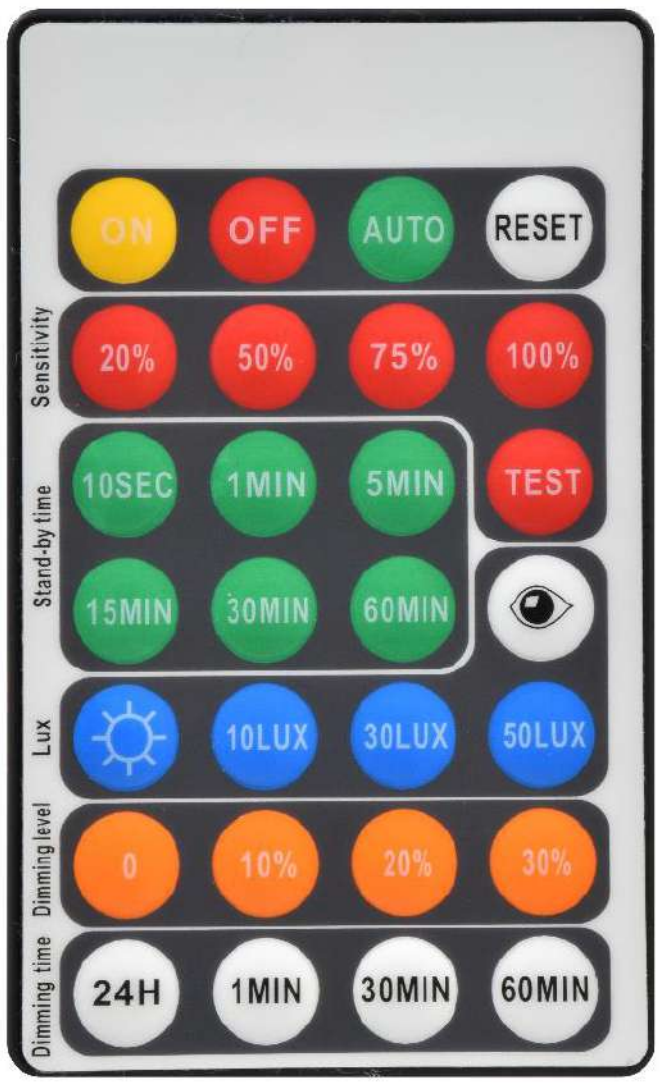

74541 - Vapor Tight Sensor Remote
(Compatible with **VAPOR1B/VAPOR2B**)

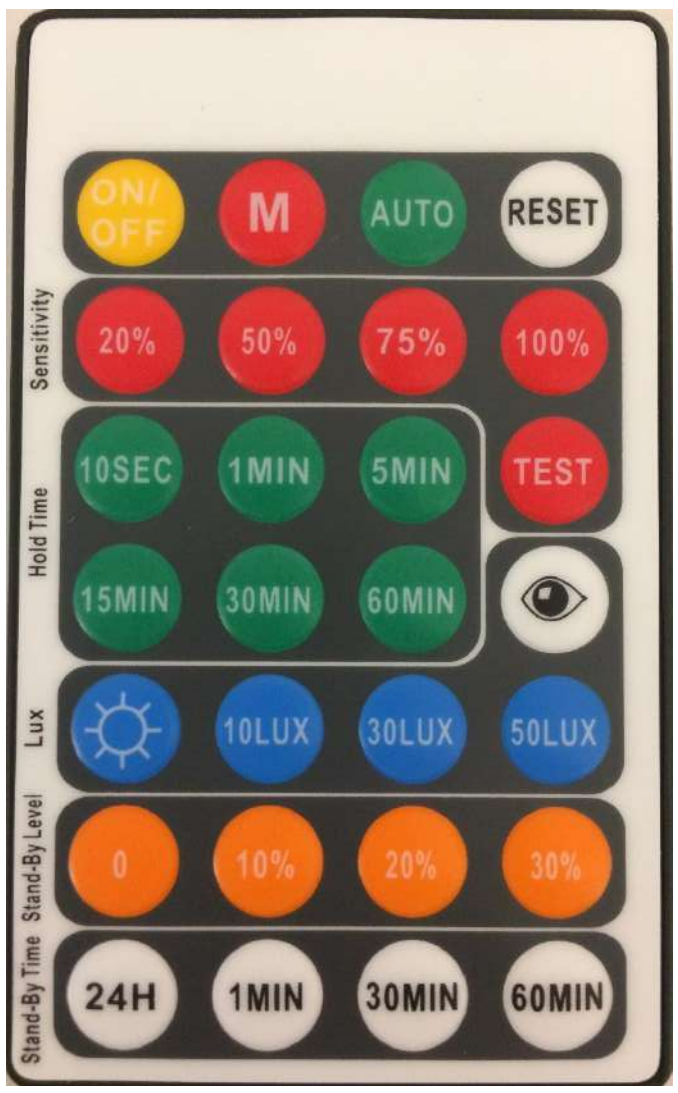

Default Settings
Sensitivity: 100%
Stand-by time: 5 minutes
Lux: 50LUX/5fc
Dimming level: 30%
Dimming time: 60 min

Add additional lenses
61457 VAPOR2B/LENS/48D5
61458 VAPOR2B/LENS/24D5
61459 VAPOR1X/LENS/24EC
61460 VAPOR1X/LENS/96EC
61461 VAPOR1X/LENS/96D5
61462 VAPOR1X/SMLENS/48EC
61463 VAPOR1X/SMLENS/48D5
61464 VAPOR2B/LENS/48EC

For more details please refer to Vapor Tight Cut Sheet or the Sensor Setting Video

Vapor Tight Accessories

74538 – Diffuse Lens for 4ft 2A
74920 – Vapor Tight Connector
74744 – Diffused Lens for 2ft 1A
74448 – 4ft Replacement Lens

61457 – Diffuse Lens for 4ft 2B
61458 – Diffuse Lens for 2ft 2B
61459 – Etched Lens for 2ft 1A
61460 – Etched Lens for 8ft 1B

61461 – Diffused Lens for 8ft 1B
61462 – Etched Lens for 20W
61463 – Diffused Lens for 20W
61464 – Etched Lens for 4ft 2B

SYLVANIA
Luminaires
Wall Pack Accessories

Slim Wall Pack

74392 - Junction Box, Bronze Finish

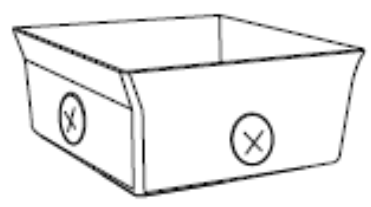

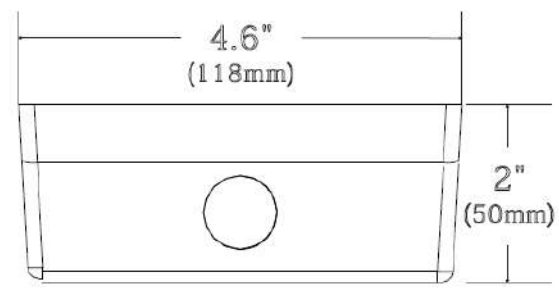

74394 - Junction Box with Knuckle Mount, Bronze Finish

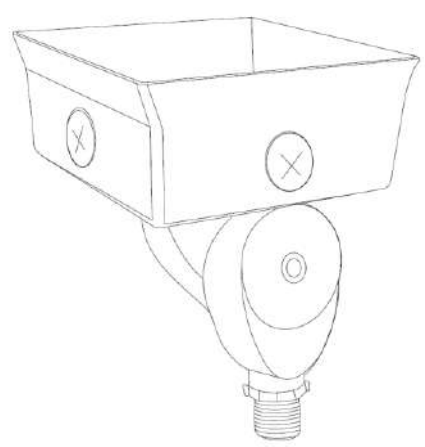

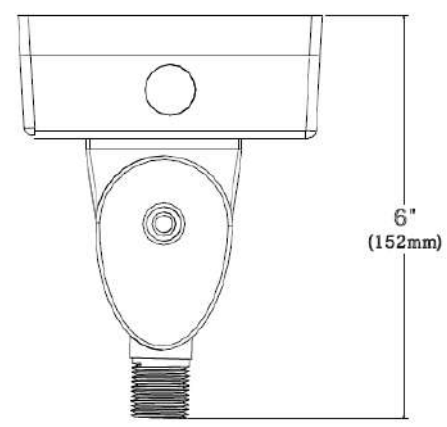

74393 - Junction Box with Trunnion Mount, Bronze Finish

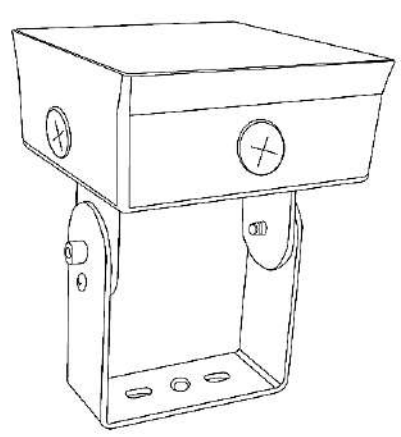

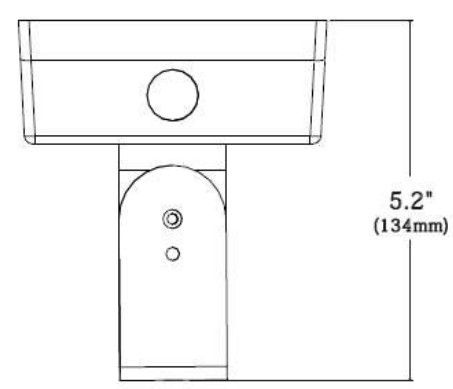

SYLVANIA
Luminaires
Wall Pack Accessories

Non-Cutoff Wall Pack

74390 - Top Visor, Bronze Finish (30-80W Versions)
74539 – Top Visor, Bronze Finish (105W Versions)

74391 - Wire Guard (30-80W Versions)
74540 – Wire Guard (105W Version)

74445 - Polycarbonate Lens with Frame (30-80W Versions)